CONENTS

CONENTS

Notes

1. While designing

(1) It is possible that semiconductors will have incorrect action or breakdown by accident. While designing with Vincenc products, please make sure that the safety of machine would not be influenced by possible incorrect action or breakdown.

(2) Vincenc does not recommend users to apply our products to devices or systems which require especially high reliability (such as space shuttle, combustion controller, atomic energy controller, medical equipments with life maintenance devices, other safety devices, etc.).Please contact Vincenc before using if the product is designed for above-mentioned purposes.

2. While handling products

(1) In order to avoid static buildup, please be sure that working table or floor is grounded.

(2) Please wear anti-static clothes, shoes and grounding belt (500kΩ to 1MΩ) while working.

(3) Please make sure testing machines and all other devices are grounded.

3. Storage

(1) Please store products under the condition that temperature (5 to 35°C) and humidity (45 to 75%) are controlled.

(2) Please store products in place where change of temperature is small to avoid influence from sudden temperature change.

(3) Please keep products away from places where corrosive gas may exist or is dusty.

Reflow process condition

To assure reliability, VINCENC suggests following temperature profile

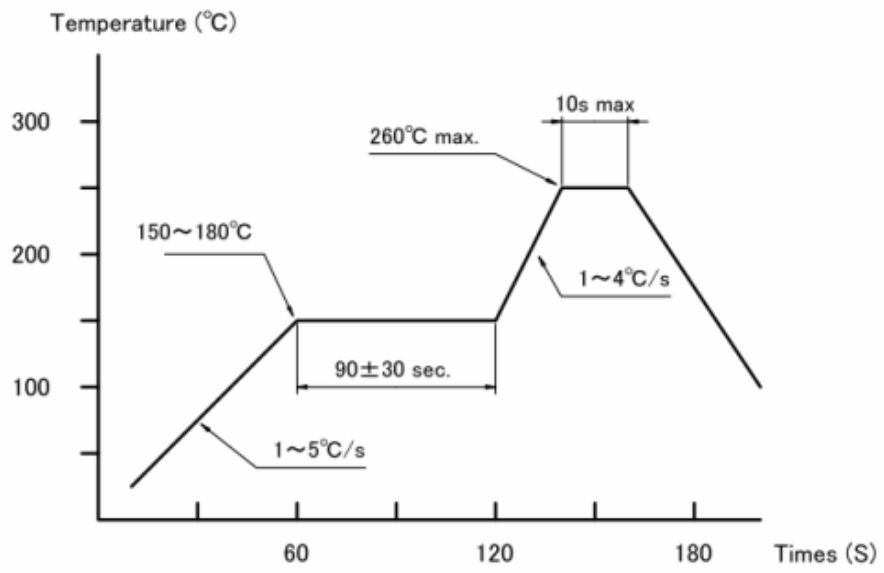

PRODUCT LINEUP

◆ Uni logic (P to P)

Parts number	Function	Opera speed	Operating voltage	Package
V7S00B	2-input NAND gate	High speed	2.0V to 6.0V	SOT-25
V7S08B	2-input AND gate			
V7S02B	2-input NOR gate			
V7S32B	2-input OR gate			
V7S86B	2-input Exclusive OR gate			
V7S66B	Analog switch			
V7S14B	Schmitt inverter			
V7S04B	Inverter			
V7SU04B	Unbuffer inverter			
V7SU04BW	Unbuffer inverter×2	High speed	2.0V to 6.0V	SOT-26
V7SH00xB	2-input NAND	Ultra high speed	2.0V to 5.5V	SOT-25, SSOT-25 (SC-88A)
V7SH08xB	2-input AND gate			
V7SH02xB	2-input NOR gate			
V7SH32xB	2-input OR gate			
V7SH86xB	2-input Exclusive OR gate			
V7SH66xB	Analog switch			
V7SH04xB	Inverter			
V7SHU04xB	Unbuffer inverter			
V7SH14xB	Schmitt inverter			

◆ Voltage comparator (P to P)

Parts number	Minimum operationing voltage	Supply voltage range	Current consumption	Package
V742B-x	1.0V	1.0V to 7.0V	Typ.0.6μA	SOT-25

◆ Operational amplifier (P to P)

Parts number	Number of circuits	Supply voltage range	Unity gain bandwidth	Current consumption	Technology	Package
V742B-x	Single	1.2V to 5.5V	Typ.1MHz	Typ.130μA	CMOS	SOT-25
V32B-x	Single	1.2V to 6.5V	Typ.200MHz	Typ.25μA	CMOS	SOT-25
V32BW-x	dual	1.2V to 6.5V	Typ.200MHz	Typ.50μA (2Amp.Unit total)	CMOS	TSSOP-8
V54-xx-x	dual	1.2V to 6.5V	Typ.1MHz	Typ.300μA (2Amp.Unit total)	CMOS	SOT-8 TSSOP-8

◆ DC/DC Converter (P to P)

Parts number	Feature	Starting voltage	Output voltage	Efficiency	Oscillating frequency	Package
V91xxxxA-x	DC/DC converter DC/DC controller PFM Step up	0.9V	1.8V to 5.5V	Typ.85%	Typ.100kHz	SOT-89 SOT-23 SC-70 (SOT-323)
V92xxxB-x	CE converter, 600kHz High output current PWM step up	0.9V	2.5V to 5.5V	Typ.85%	Typ.600kHz	SOT-89 SOT-89-5
V93xxxB-x	High efficiency PFM Step up	0.9V	1.8V to 3.8V	Typ.85%	Typ.100kHz	SOT-89 SOT-23
V94xxB-x	PFM Step up	0.98V	2.5V to 5.5V	Typ.80%	Typ.35kHz	SOT-89
V95xxD-x	PWM Step up	0.98V	2.5V to 5.5V	Typ.85%	Typ.55kHz	SOT-89

◆ Voltage detector (P to P)

Parts number	Feature	Detection voltage	Current consumption	Operationg voltage	Output form	Package
V75xxxxB-x	Small package	1.4V to 5.5V	Typ.0.6μA	0.8V to 6.0V	N-ch CMOS	SOT-89 SOT-23 SC-82AB SC-70 (SOT-323)
V76xxxxB-x	Delay function : Typ.50ms or Typ.150ms or Typ.250ms or Typ.500ms or low and high reset	1.9V to 4.8V	Typ.7.0μA	1.0V to 6.0V	CMOS	SOT-23
V77xxxxBC-x	Dual circuits	0.8V to 5.5V 1.1v to 5.0V	Typ.1.5μA	0.8V to 6.0V	N-ch	SOT-25
V97xxxxB-x	Standard type	0.9V to5.5V 1.6v to 5.5V	Typ.1.5μA	0.8V to 6.0V	N-ch CMOS	SOT-89 SOT-23

◆ Voltage regulator (P to P)

Parts number	Feature	Output voltage	Current consumption	Input voltage	Technology	Package
V88xxxxA-x	300mA LDO Chip enable	8.0V to 5.0V	Typ.15.0μA Max.0.5μA (Sand-by)	1.4v to 6.0V	CMOS	SOT-89 SOT-89-5 SOT-23 SOT-25 SC-70 (SOT-323) SC-70-5
V89xxxBC-x	300mA LDO Chip enable	8.0V to 5.0V	Typ.15.0μA Max.0.5μA (Sand-by)	1.4v to 6.0V	CMOS	SOT-23 SOT-25
V87xxxA-x	300mA LDO	1.5V to 5.0V	Typ.1.0μA	1.8V to 6.0V	CMOS	SOT-89 SOT-23 SC-70 (SOT-323)
V86xxxxBxA-x	Dual 400mA LDO	1.2V to 4.0V	Typ.25.0μA	1.4v to 6.0V	CMOS	SOT-26
V98xxxB-x	Standard type	1.2V to 6.0V	Typ.4.0μA	Max.10.0V	CMOS	SOT-89 SOT-23
V99xxxB-x	Low saturation Chip enable	1.5V to 6.0V	Typ.25.0μA Max.0.1μA (Sand-by)	Max.8.0V	CMOS	SOT-89 SOT-89-5
V85xxxxA-x	800mA LDO	0.8V to 5.0V	Typ.40.0μA	1.4v to 6.0V	CMOS	SOT-223 SOT-89 SOT-89-5
V1117xG-xx-S	1A LDO	1.8V,2.5v, 3.3V,5.0V	Typ.50.0μA	Max.15.0V	Bipolar	SOT-223 TO-252-3
V1117xG-S		1.3V to 4.0V	Typ.55.0μA			
V1085DG-S	3A LDO	1.27V to 5.55V	Typ.55.0μA	Max.7.0V	Bipolar	TO-252
V78L05CG-S	3-Terminal positive	5.0V		7.0V to 20.0V	Bipolar	SOT-89

◆ Special function (P to P)

Parts number	Feature	Current consumption	Input voltage	Oscillating frequency	Technology	Package
V901FxA-S	LED Driver		2.6V to 5.0V	Typ.900kHz	CMOS	4×4 QFN-16 3×3 QFN-16 (under development)
V185BB-S	Laser / Diode / Driver	Typ.1mA	2.0V to 6.5V	NA	Bipolar	SOT-26
V900x-x	LED Driver	Max.14μA	Max.5.0V	Typ.35/55kHz	CMOS	SOT-89

◆ MOSFET (P to P)

Type	Channel	Vds (V)	Id (A)	Pd (W)	Rds(ON)(Typ.) mΩ	Package
Single	N	20 to 75	0.2 to 75.0	0.2 to 96.0	Vgs=1.8V to 10V	SOP-8, SOT-23, SOT-26, SC-70, SC-70-6,TO-252-3
	P	-12 to -60	-0.7 to -18.0	0.35 to 48.0	Vgs=1.8V to -10V	SOP-8,TSSOP-8, SOT-23,SOT-26, SC-70,SC-70-6, TO-252-3
Single with schottky	N	20 to 30	3.3 to 13.0	1.15 to 3.10	Vgs=1.8V to 10V	SOP-8, SOT-26
	P	-30	-2.3 to -5.0	1.15 to 2.00	Vgs=-2.5V to -10V	TSSOP-8,SOT-26
Dual	N	20 to 60	0.9 to 9.8	0.3 to 2.0	Vgs=1.8V to 10V	SOP-8,TSSOP-8, SOT-26,SC-70-6
	P	-12 to -30	-0.6 to -8.0	0.3 to 2.5	Vgs=-1.5V to -10V	SOP-8,TSSOP-8, SC-70-6
Dual with schotthy	N	30	6.9 to 9.3	20	Vgs=2.5V to 10V	SOP-8
Complementa ry	N	20 to 60	0.9 to 12.0	0.3 to 20.0	Vgs=1.8V to 10V	SOP-8, SOT-26, SC-70-6,TO-252-5, TO-252-4
	P	-20 to -60	-0.6 to -12.0	0.3 to 50.0	Vgs=-1.8V to -10V	
Complementary with schottky	N	30	6.9 to 8.5	2.0	Vgs=2.5V to 10V	SOP-8
	P	-30	-6.0 to -7.1	2.0	Vgs=-2.5V to -10V	

■ General description

V7SxxB is CMOS logic IC which includes one package. V7SxxB realizes high speed operation similar to LS-TTL, but the power consumption is low because of its CMOS features. V7XxxB shares same electrical characteristics as 74HC series.
Since gate is separated in each package, it is possible to arrange small numbers of V7SxxB within minimum space on print board. Hence, with V7SxxB, it is possible to cut the assembly space or wiring distance largely. The modification of print board can also be limited to minimum space with the small size of this series.

■ Features

- Same electrical characteristic as 74HC series (output current is around 1/2 of 74HC series)
- Low consumption current : Idd=1.0μA(Max.)(Top=25°C)
- Wide power voltage range : 2.0V to 6.0V
- High speed : Tpd=5ns(Typ.)(Vdd=5.0V)
- Symmetrical output impedance : | Ioh |=Iol=2mA(Min.)(Vdd=4.5V)
- Small package : SOT-25, SOT-26

■ Application

- Cell phones
- Digital cameras
- Portable electrical appliances like PDA, etc.
- Computers and peripherals
- Digital electrical appliances like LCD TV sets, DVD recorders/players, STB, etc.
- Modification inside print board, adjustment of timing, solution to noise

■ Maximum absolute ratings

Parameter	Symbol	Limit	Unit
Power supply voltage	Vdd	-0.5 to +7.0	V
Input voltage	Vin	-0.5 to Vdd+0.5	V
Output voltage	Vout	-0.5 to Vdd+0.5	V
Input protection diode current	Iik	±20	mA
Output parasitic diode current	Iok	±20	mA
Output current	Iout	±25	mA
VDD/GND current	Idd, Ignd	±25	mA
Power dissipation	Pd	200	mW
Storage temperature	Tstg	-65 to +150	°C

■ Suggested operating condition

Parameter	Symbol	Limit		Unit
Power voltage	Vdd	2.0 to 6.0		V
Input voltage	Vin	0 to Vdd		V
Output voltage	Vout	0 to Vdd		V
Operating temperature	Top	-40 to +85		°C
High-input down-time	Tr, tf	Vdd=2.0V	0 to 1000	ns
		Vdd=4.5V	0 to 500	
		Vdd=6.0V	0 to 400	

■ Product selection guide

Product	Function	Marking
V7S00B-EL	2-input NAND gate	SOT-25
V7S08B-EL	2-input AND gate	
V7S02B-EL	2-input NOR gate	
V7S32B-EL	2-input OR gate	
V7S86B-EL	2-input Exclusive OR gate	
V7S66B-EL	Analog switch	
V7S14B-EL	Schmitt inverter	
V7S04B-EL	Inverter	
V7SU04B-EL	Unbuffer inverter	
V7SU04BW-EL	Unbuffer inverter × 2	SOT-26

P.S. :EL is the direction of taping. Please refer to P114.

■ Pin configuration

Function	NAND					AND				
Diagram & Top view	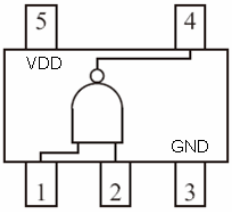					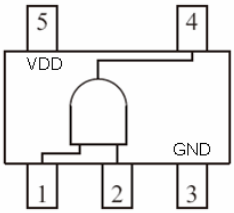				
Product	V7S00B					V7S08B				
Pin Configuration	Pin No	Pin name	Input		Output	Pin No	Pin name	Input		Output
	1	INB	INA	INB	OUTX	1	INB	INA	INB	OUTX
	2	INA	Low	Low	High	2	INA	Low	Low	Low
	3	GND	Low	High	High	3	GND	Low	High	Low
	4	OUTX	High	Low	High	4	OUTX	High	Low	Low
	5	VDD	High	High	Low	5	VDD	High	High	High

Function	NOR					OR				
Diagram & Top view	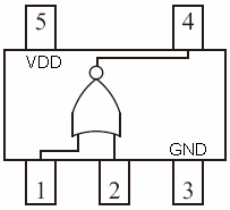					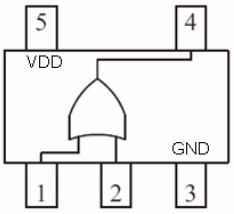				
Product	V7S02B					V7S32B				
Pin Configuration	Pin No	Pin name	Input		Output	Pin No	Pin name	Input		Output
	1	INB	INA	INB	OUTX	1	INB	INA	INB	OUTX
	2	INA	Low	Low	High	2	INA	Low	Low	Low
	3	GND	Low	High	Low	3	GND	Low	High	High
	4	OUTX	High	Low	Low	4	OUTX	High	Low	High
	5	VDD	High	High	Low	5	VDD	High	High	High

Function	Exclusive OR					Analog switch			
Diagram & Top view	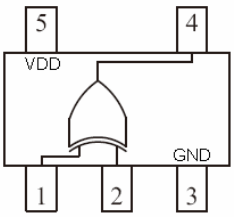					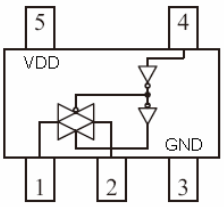			
Product	V7S86B					V7S66B			
Pin Configuration	Pin No	Pin name	Input		Output	Pin No	Pin name	Control	Switch
	1	INB	INA	INB	OUTX	1	IN/OUT	Low	OFF
	2	INA	Low	Low	Low	2	OUT/IN		
	3	GND	Low	High	High	3	GND		
	4	OUTX	High	Low	High	4	CONTROL	High	ON
	5	VDD	High	High	Low	5	VDD		

Function	Inverter				Unbuffer inverter			
Diagram & Top view	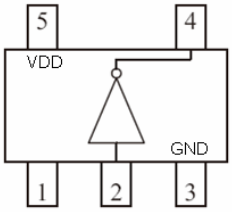				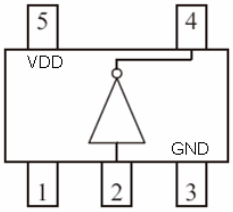			
Product	V7S04B				V7SU04B			
Pin Configuration	Pin No	Pin name	Input	Output	Pin No	Pin name	Input	Output
	1	NC	INY	OUTX	1	NC	INY	OUTX
	2	INY			2	INY		
	3	GND	Low	High	3	GND	Low	High
	4	OUTX			4	OUTX		
	5	VDD	High	Low	5	VDD	High	Low

Function	Unbuffer inverter × 2				Schmitt inverter			
Diagram & Top view	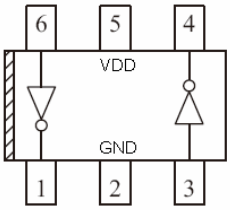				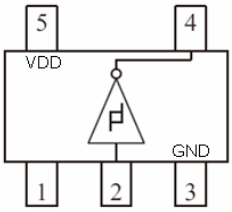			
Product	V7SU04BW				V7S14B			
Pin Configuration	Pin No	Pin name	Input	Output	Pin No	Pin name	Input	Output
	1	OUTA	A	OUTA	1	NC	INY	OUTX
	2	GND			2	INY		
	3	INB	INB	OUTB	3	GND	Low	High
	4	OUTB	Low	High	4	OUTX		
	5	VDD	High	Low	5	VDD	High	Low
	6	INA						

■ General description

V7SHxxxB is CMOS logic IC which includes one package. The power consumption is low because of its CMOS features.
Since gate is separated in each package, it is possible to arrange small numbers of V7SHxxxB within minimum space on print board. Hence, with V7SHxxB, it is possible to cut the assembly space or wiring distance largely. The modification of print board can also be limited to minimum space with the small size of this series. Since VDD protection diode is not included in protection circuit of input pin, it chacteristic enables V7SHxxxB to accept signal input higher then VDD.

■ Features

- Same electrical characteristic and high speed operation as 74VHC series
- Low consumption current : Idd=1.0μA(Max.)(Top=25°C)
- Wide power voltage range : 2.0V to 5.5V
- High speed : Vih=5.5V(Max.)(Vdd=0 to 5.5v)
- Symmetrical output impedance : Tpd=2ns(Typ.)(Vdd=5.0V)
- Small package : SOT-25, SSOT-225(SC-88A)

■ Application

- Cell phones
- Digital cameras
- Portable electrical appliances like PDA, etc.
- Computers and peripherals
- Digital electrical appliances like LCD TV sets, DVD recorders/players, STB, etc.
- Modification inside print board, adjustment of timing, solution to noise
- Power voltage change from 5V to 3V

■ Maximum absolute ratings

Parameter	Symbol	Limit	Unit
Power supply voltage	Vdd	-0.5 to +6.0	V
Input voltage	Vin	-0.5 to +6.0	V
Output voltage	Vout	-0.5 to Vdd+0.5	V
Input protection diode current	Iik	-20	mA
Output parasitic diode current	Iok	±20	mA
Output current	Iout	±25	mA
VDD/GND current	Idd, Ignd	±25	mA
Power dissipation	Pd	150200	mW
Storage temperature	Tstg	-65 to +150	°C

■ Suggested operating condition

Parameter	Symbol	Limit		Unit
Power voltage	Vdd	2.0 to 6.0		V
Input voltage	Vin	0 to 5.5		V
Output voltage	Vout	0 to Vdd		V
Operating temperature	Top	-40 to +85		°C
High-input down-time	Tr, tf	Vdd=3.3±0.3V	0 to 200	ns
		Vdd=5.0±0.5V	0 to 100	

■ Product selection guide

Product		Function
SOT-25 Package(M*²)	SSOT-25(SC-88A)Package(T*²)	
V7SH00MB-EL	V7SH00TB-EL	2-input NAND gate
V7SH08MB-EL	V7SH08TB-EL	2-input AND gate
V7SH02MB-EL	V7SH02TB-EL	2-input NOR gate
V7SH32MB-EL	V7SH32TB-EL	2-input OR gate
V7SH86MB-EL	V7SH86TB-EL	2-input Exclusive OR gate
V7SH66MB-EL	V7SH66TB-EL	Analog switch
V7SH04MB-EL	V7SH04TB-EL	Inverter
V7SHU04MB-EL	V7SHU04TB-EL	Unbuffer inverter
V7SH14MB-EL	V7SH14TB-EL	Schmitt inverter

P.S. : 1.EL is the direction of taping. P114 for taping information
2.M is the mark of SOT-25 packing. T is the mark of SSOT-25 package

■ Pin configuration

Function	NAND					AND				
Diagram & Top view	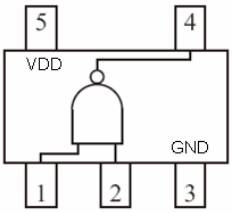					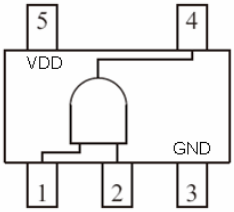				
Product	V7SH00xB					V7SH08xB				
Pin Configura-tion	Pin No	Pin name	Input		Output	Pin No	Pin name	Input		Output
	1	INB	INA	INB	OUTX	1	INB	INA	INB	OUTX
	2	INA	Low	Low	High	2	INA	Low	Low	Low
	3	GND	Low	High	High	3	GND	Low	High	Low
	4	OUTX	High	Low	High	4	OUTX	High	Low	Low
	5	VDD	High	High	Low	5	VDD	High	High	High

Function	NOR					OR				
Diagram & Top view	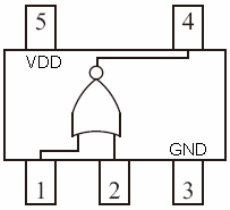					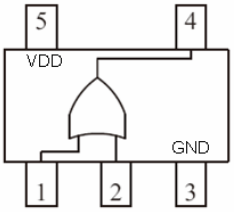				
Product	V7SH02xB					V7SH32xB				
Pin Configura-tion	Pin No	Pin name	Input		Output	Pin No	Pin name	Input		Output
	1	INB	INA	INB	OUTX	1	INB	INA	INB	OUTX
	2	INA	Low	Low	High	2	INA	Low	Low	Low
	3	GND	Low	High	Low	3	GND	Low	High	High
	4	OUTX	High	Low	Low	4	OUTX	High	Low	High
	5	VDD	High	High	Low	5	VDD	High	High	High

Function	Exclusive OR					Analog switch			
Diagram & Top view	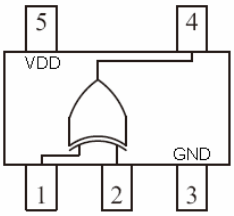					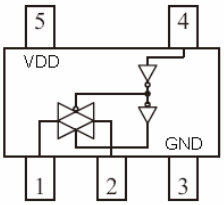			
Product	V7SH86xB					V7SH66xB			
Pin Configura-tion	Pin No	Pin name	Input		Output	Pin No	Pin name	Control	Switch
	1	INB	INA	INB	OUTX	1	IN/OUT	Low	OFF
	2	INA	Low	Low	Low	2	OUT/IN		
	3	GND	Low	High	High	3	GND		
	4	OUTX	High	Low	High	4	CONTROL	High	ON
	5	VDD	High	High	Low	5	VDD		

Function	Inverter				Unbuffer inverter			
Diagram & Top view	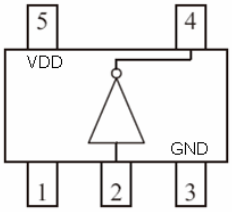				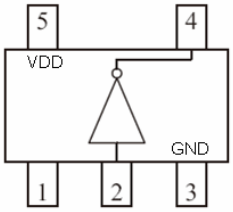			
Product	V7SH04xB				V7SHU04xB			
Pin Configura-tion	Pin No	Pin name	Input	Output	Pin No	Pin name	Input	Output
	1	NC	INY	OUTX	1	NC	INY	OUTX
	2	INY			2	INY		
	3	GND	Low	High	3	GND	Low	High
	4	OUTX			4	OUTX		
	5	VDD	High	Low	5	VDD	High	Low

Function	Schmitt inverter			
Diagram & Top view	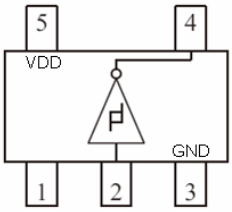			
Product	V7S14B			
Pin Configura-tion	Pin No	Pin name	Input	Output
	1	NC	INY	OUTX
	2	IND		
	3	GNB	Low	High
	4	OUTB		
	5	VDD	High	Low

■ General description

V742B is low voltage and low power CMOS comparator which makes it easy to design power circuits ; V742B is able to extend battery life because of single power source, low voltage supply operating range (Vdd≥+1.0V) and low power consumption.
With N-ch open drain output, V742B is able to introduce depletion transistors to differential input stages and drive TTL and CMOS logic IC. V742B also covers wide input voltage range (Vss+0.1V to Vdd-0.2V).

■ Features

- Low voltage operation : Vdd≥+1.0V
- Low current consumption : Typ.Idd = 0.6μA(Vdd = 1.5V)
- Operation voltage range : 1.0V≤Vdd≤7.0V
- Input voltage range : Vss+0.1V to Vdd-0.2V
- Output stage : N-ch open drain
- Package : SOT-25

■ Application

- Battery-operated devices
- Micropower signal processing
- Low voltage analog circuits

■ Maximum absolute ratings

Parameter	Symbol	Limit	Unit
Power supply voltage	Vdd	10	V
Input voltage	Vin	Vss-0.3 to Vdd+0.3	V
Output voltage	Vout	10	V
Output current	Iout	30	mA
Power dissipation	Pd	300	mW
Operating temperature	Top	-20 to +70	°C
Storage temperature	Tstg	-55 to +125	°C

■ Selection guide

V742B-x

Symbol		
a	Product version	B
b	Taping direction	S:Ref.P114 N:Ref.P114

V742 B – x
↑ ↑
a b

■ Pin configuration

SOT-25(TOP VIEW)

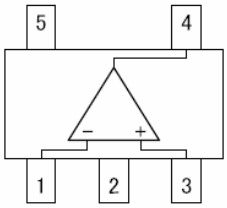

Pin No.	Pin name
1	IN-
2	VDD
3	IN+
4	OUT
5	VSS

■ Electrical characteristics

Vss=0V,Top=25°C

Parameter	Symbol	Condition	Min.	Typ.	Max.	Unit
Power supply voltage	Vdd		1.0			V
Common-mode input voltage	Vicr	Vdd=1.0V to 7.0V	Vss+0.1		Vdd-0.2	V
Input offset voltage	Vio-1	Vdd=1.0V to 3.6V			8	mV
	Vio-2	Vdd=1.0V to 7.0V			12	mV
Input current	Iin	Vdd=1.0V to 7.0V			100	pA
Output current	Iout-1	Vdd=1.0V, Vol=0.4V	30.0	50.0		μA
	Iiout-2	Vdd=1.5V, Vol=0.4V	0.6	0.8		mA
Current consumption	Iss-1	Vdd=1.5V, Vout:" L "		0.6	2.0	μA
	Iss-2	Vdd=3.6V, Vout:" L "		4.5	8.0	μA
	Iss-3	Vdd=7.0V, Vout:" L "		20.0	35.0	μA
Response time	Th1	RL=100kΩ,CL=15pF,Vdd=1.5V		60		μs
	T1h	RL=100kΩ,CL=15pF,Vdd=1.5V		40		μs

■ General description

V842B is low voltage and low power CMOS single operational amplifier which makes it easy to design circuits and operates from a 1.2V single power source. As for power supply voltage, V recommends to use within the range of 1.2 V to 5.5 V. The consumption current of V842B is low; on the other hand, since the output stage of V842B is class A operation drive, V842B is able to provide current supply of 90μA(Typ. At Vdd=1.5V). V842B is suitable for signal process of applications which require low power.

■ Features

- Operation from a single power source
- Input available within the range of power supply voltage
- Low voltage operation : 1.2V≤Vdd≤5.5V
- Low current consumption : Typ.130μA(Vdd=1.5V)
- Unity gain bandwidth : Typ.1.0MHz(Vdd=1.5V)
- Package : SOT-25

■ Application

- Battery-operated portable devices
- Signal process in low power circuits
- Low voltage analog circuits

■ Maximum absolute ratings

Parameter	Symbol	Limit	Unit
Power supply voltage	Vdd	10	V
Input voltage	Vin	Vss-0.3 to Vdd+0.3	V
Differential input voltage	Vid	Vdd-Vss	V
Output voltage	Vout	Vss-0.3 to Vdd+0.3	V
Output short current		Continuous	Sec.*
Power dissipation	Pd	300	mW
Operating temperature	Top	-30 to +80	°C
Storage temperature	Tstg	-55 to +125	°C

* When power supply voltage is below 5.0V, short of output terminal will do no damage to the IC.
When power supply voltage is above 5.0V, it may cause short of VDD and result in reliability damage of the IC.

■ Suggested operating condition

Parameter	Symbol	Min.	Typ.	Max.	Unit
Power supply voltage	Vdd	1.2		5.5	V
Operating temperature	Top	-20		+70	°C

■ Selection guide

V842B-x

Symbol		
a	Product version	B
b	Taping direction	S,N:Ref.P114

V842 B – x
↑ ↑
a b

■ Pin configuration

SOT-25(TOP VIEW)

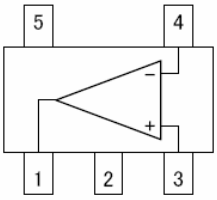

Pin No.	Pin name
1	OUT
2	VDD
3	IN+
4	IN-
5	VSS

■ Standard circuit

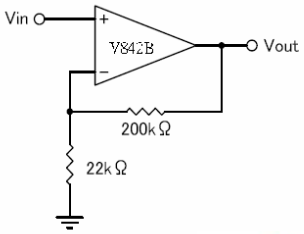

■ Electrical characteristics

Vdd=1.5V Vss=0V,Top=25°C

Parameter	Symbol	Condition	Min.	Typ.	Max.	Unit
Input offset voltage	Vio	Vout=Vdd/2			10	mV
Input bias current	Iib				1	nA
Common-mode input voltage range	Vcmr		0.08		1.45	V
Maximum output voltage swing	Vouts	Vid=100mV, RL=200kΩ	1.42			V
Maximum output source current	Isource	Vid=100mV	40	90		μA
Open-loop gain	Avd	Vout=300mV, RL=200kΩ		75		dB
Common-mode rejection ratio	CMRR			75		dB
Supply voltage rejection ratio	PSRR			75		dB
Current consumption	Iss	Vout=Vdd/2, No-load		130	240	μA
Unity gain bandwidth	GBW			1		MHz
Slew rate	SR	RL=200kΩ, CL=20pF	0.45	1.00		V/μs

Vdd=3.0V Vss=0V,Top=25°C

Parameter	Symbol	Condition	Min.	Typ.	Max.	Unit
Input offset voltage	Vio	Vout=Vdd/2			10	mV
Input bias current	Iib				1	nA
Common-mode input voltage range	Vcmr		0.04		2.90	V
Maximum output voltage swing	Vouts	Vid=100mV, RL=200kΩ	2.80			V
Maximum output source current	Isource	Vid=100mV	45	100		μA
Open-loop gain	Avd	Vout=300mV, RL=200kΩ		80		dB
Common-mode rejection ratio	CMRR			85		dB
Supply voltage rejection ratio	PSRR			80		dB
Current consumption	Iss	Vout=Vdd/2, No-load		145	280	μA
Unity gain bandwidth	GBW			1		MHz
Slew rate	SR	RL=200kΩ, CL=20pF	0.45	1.00		V/μs

■ General description

V832B is low power CMOS OP-AMP provided with input common mode voltage range and push-pull output stage. V832B makes it easy to design power circuits and is able to operate from single +1.2V power supply. V832B is suitable for applications such as portable devices which require low power and single source.

■ Features

- Operation from a single power source
- Low voltage operation : 1.2V≤Vdd≤6.0V
- Low current consumption : Typ.25μA(Vdd=3.0V)
- Common-mode input voltage range: Vss to Vdd-0.3V(Vdd=1.5V)
  : Vss to Vdd-0.1V(Vdd=3.0V)
- Output stage : Push-pull
- Unity gain bandwidth : Typ.200kHz
- Package : SOT-25

■ Application

- Battery-operated portable devices
- Micropower signal process
- Low voltage analog circuits

■ Maximum absolute ratings

Parameter	Symbol	Limit	Unit
Power supply voltage	Vdd	10	V
Input voltage	Vin	Vss-0.3 to Vdd+0.3	V
Output voltage	Vout	Vss-0.3 to Vdd+0.3	V
Output short current		Continuous	Sec.
Power dissipation	Pd	300	mW
Operating temperature	Top	-20 to +70	°C
Storage temperature	Tstg	-55 to +125	°C

■ Selection guide

V842B-x

Symbol		
a	Product version	B
b	Taping direction	S,N:Ref.P114

V832 B – x
↑ ↑
a b

■ Pin configuration

SOT-25(TOP VIEW)

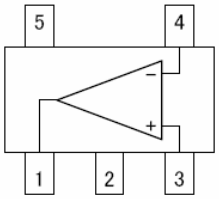

Pin No.	Pin name
1	OUT
2	VDD
3	IN+
4	IN-
5	VSS

■ Standard circuit

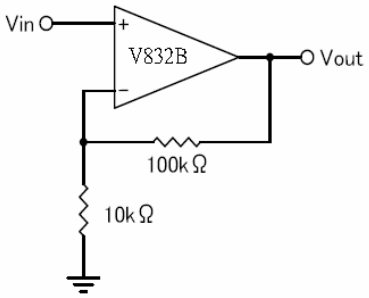

■ Electrical characteristics

Vdd=1.5V Vss=0V,Top=25°C

Parameter	Symbol	Condition	Min.	Typ.	Max.	Unit
Input offset voltage	Vio	Vin=Vdd/2, Unity gain follower			±6	mV
Input bias current	Iib				1.0	nA
Common-mode input voltage range	Vcmr	For CMRR≥50dB	0.00		1.20	V
Maximum output voltage swing	Vouts	Vid=100mV, RL=10kΩ to Vss	1.40			V
Large-signal voltage gain	Avd	RL=10kΩ to Vss		95		dB
Common-mode rejection ratio	CMRR	RL=10kΩ to Vss		70		dB
Supply voltage rejection ratio	PSRR	RL=10kΩ to Vss Vdd=1.35V to 6.0V		95		dB
Current consumption	Iss	Vin+=Vdd/2, Unity gain follower		22	40	μA
Unity gain bandwidth	GBW			200		kHz
Slew rate	SR	RL=100kΩ, CL=20pF	80	120		mV/μs

Vdd=3.0V Vss=0V,Top=25°C

Parameter	Symbol	Condition	Min.	Typ.	Max.	Unit
Input offset voltage	Vio	Vin=Vdd/2, Unity gain follower			±6	mV
Input bias current	Iib				1.0	nA
Common-mode input voltage range	Vcmr	For CMRR≥50dB	0.00		2.90	V
Maximum output voltage swing	Vouts	Vid=100mV, RL=10kΩ to Vss	2.90			V
Large-signal voltage gain	Avd	RL=10kΩ to Vss		100		dB
Common-mode rejection ratio	CMRR	RL=10kΩ to Vss		70		dB
Supply voltage rejection ratio	PSRR	RL=10kΩ to Vss Vdd=2.7V to 6.0V		100		dB
Current consumption	Iss	Vin+=Vdd/2, Unity gain follower		25	45	μA
Unity gain bandwidth	GBW			150		kHz
Slew rate	SR	RL=100kΩ, CL=20pF	80	100		mV/μs

■ General description

V832BW is low power CMOS dual operational amplifier which consists of doubly-packed V832B. V832BW makes it easy to design power circuits and is able to operate from single +1.2V source.

■ Features

- Operation from a single power source
- Low voltage operation : 1.2V≤Vdd≤6.0V
- Low current consumption : Typ.50μA(Vdd=3.0V,2Amp.units total)
- Common-mode input voltage range Vss to Vdd-0.3V(Vdd=1.5V)
  : Vss to Vdd-0.1V(Vdd=3.0V)
- Output stage : Push-pull
- Unity gain bandwidth : Typ.200kHz
- Package : SOT-8

■ Application

- Battery-operated portable devices
- Micropower signal process
- Low voltage analog circuits

■ Maximum absolute ratings

Parameter	Symbol	Limit	Unit
Power supply voltage	Vdd	10	V
Input voltage	Vin	Vss-0.3 to Vdd+0.3	V
Output voltage	Vout	Vss-0.3 to Vdd+0.3	V
Output short current		Continuous	Sec.
Power dissipation	Pd	300	mW
Operating temperature	Top	-20 to +70	°C
Storage temperature	Tstg	-55 to +125	°C

■ Selection guide

V832BW-x

Symbol		
a	Product version	B
b	Dual mark	W:dual
c	Taping direction	S,N:Ref.P114

V832 B W– x
↑ ↑ ↑
a b c

■ Pin configuration

TSSOP-8(TOP VIEW)

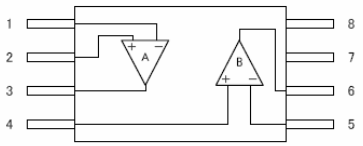

Pin No.	Pin name
1	IN-A
2	IN+A
3	OUTA
4	IN+B
5	IN-B
6	OUTB
7	VDD
8	VSS

■ Standard circuit

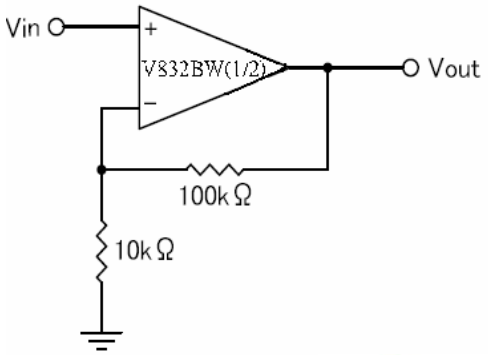

■ Electrical characteristics

Vdd=1.5V Vss=0V,Top=25°C

Parameter	Symbol	Condition	Min.	Typ.	Max.	Unit
Input offset voltage	Vio	Vin=Vdd/2, Unity gain follower			±6	mV
Input bias current	Iib				1.0	nA
Common-mode input voltage range	Vcmr	For CMRR≥50dB	0.00		1.20	V
Maximum output voltage swing	Vouts	Vid=100mV, RL=10kΩ to Vss	1.40			V
Large-signal voltage gain	Avd	RL=10kΩ to Vss		95		dB
Common-mode rejection ratio	CMRR	RL=10kΩ to Vss		70		dB
Supply voltage rejection ratio	PSRR	RL=10kΩ to Vss Vdd=1.35V to 6.00V		95		dB
Current consumption (2Amp.unit total)	Iss	Vin+=Vdd/2, Unity gain follower		44	80	μA
Unity gain bandwidth	GBW			200		kHz
Slew rate	SR	RL=100kΩ, CL=20pF	80	120		mV/μs

Vdd=3.0V Vss=0V,Top=25°C

Parameter	Symbol	Condition	Min.	Typ.	Max.	Unit
Input offset voltage	Vio	Vin=Vdd/2, Unity gain follower			±6	mV
Input bias current	Iib				1.0	nA
Common-mode input voltage range	Vcmr	For CMRR≥50dB	0.00		2.90	V
Maximum output voltage swing	Vouts	Vid=100mV, RL=10kΩ to Vss	2.90			V
Large-signal voltage gain	Avd	RL=10kΩ to Vss		100		dB
Common-mode rejection ratio	CMRR	RL=10kΩ to Vss		70		dB
Supply voltage rejection ratio	PSRR	RL=10kΩ to Vss Vdd=2.7V to 6.0V		100		dB
Current consumption	Iss	Vin+=Vdd/2, Unity gain follower		25	90	μA
Unity gain bandwidth	GBW			150		kHz
Slew rate	SR	RL=100kΩ, CL=20pF	80	100		mV/μs

■ General description

V854xx is low power consumption CMOS dual OP-AMP with wide range of common mode signal input voltage and push-pull output stage. With 1.2V single power supply, V854xx makes it easy to design power circuit.V854xx is suitable for circuit of portable equipments which require low power consumption or single power.

■ Features

- Single supply operation
- Low voltage operation : 1.2V≤Vdd≤6.0V
- Low current consumption : Typ.300μA(Vdd=3.0V,2Amp.units total)
- Common-mode input voltage range: Vss to Vdd-0.3V(Vdd=1.5V)
  : Vss to Vdd-0.1V(Vdd=3.0V)
- Output stage : Push-pull
- Unity gain bandwidth : Typ.1MHz(Vdd=1.5V)
  : Typ.0.8MHz(Vdd=3.0V)
- Package : SOT-8, TSSOP-8

■ Application

- Battery-operated devices
- Micropower signal process
- Low voltage analog circuits

■ Maximum absolute ratings

Parameter	Symbol	Limit	Unit
Power supply voltage	Vdd	10	V
Input voltage	Vin	Vss-0.3 to Vdd+0.3	V
Output voltage	Vout	Vss-0.3 to Vdd+0.3	V
Output short current		Continuous	Sec.
Power dissipation	Pd	300	mW
Operating temperature	Top	-20 to +70	°C
Storage temperature	Tstg	-55 to +125	°C

■ Selection guide

V854xx-x

Symbol		
a , b	Package	AA:SOP-8 BB:TSSOP-8
c	Taping direction	S,N:Ref.P115, P116

V854 x x– x
↑ ↑ ↑
a b c

■ Pin configuration

SOP-8(TOP VIEW)

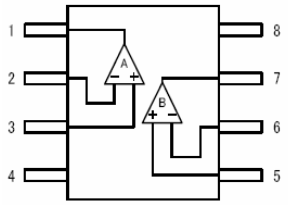

TSSOP-8(TOP VIEW)

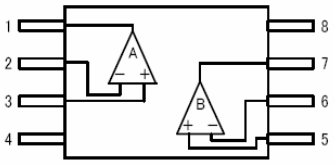

Pin No.	Pin name
1	OUTA
2	IN-A
3	IN+A
4	VSS
5	IN+B
6	IN-B
7	OUTB
8	VDD

■ Standard circuit

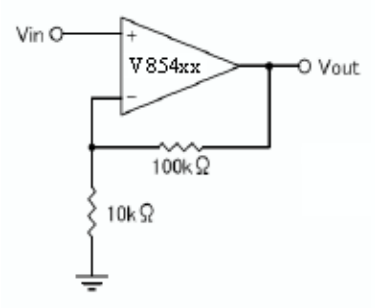

■ Electrical characteristics

Vdd=1.5V Vss=0V,Top=25°C

Parameter	Symbol	Condition	Min.	Typ.	Max.	Unit
Input offset voltage	Vio	Vin=Vdd/2, Unity gain follower			±6	mV
Input bias current	Iib				1.0	nA
Common-mode input voltage range	Vcmr	For CMRR≥45dB	0.00		1.20	V
Maximum output voltage swing	Vouts	Vid=100mV, RL=10kΩ to Vss	1.40			V
Large-signal voltage gain	Avd	RL=10kΩ to Vss		85		dB
Common-mode rejection ratio	CMRR	RL=10kΩ to Vss		65		dB
Supply voltage rejection ratio	PSRR	RL=10kΩ to Vss Vdd=1.35V to 6.00V		85		dB
Current consumption	Iss	Vin+=Vdd/2, Unity gain follower		270	400	μA
Unity gain bandwidth	GBW			1.0		MHz
Slew rate	SR	RL=100kΩ, CL=20pF	0.55	0.85		V/μs

Vdd=3.0V Vss=0V,Top=25°C

Parameter	Symbol	Condition	Min.	Typ.	Max.	Unit
Input offset voltage	Vio	Vin=Vdd/2, Unity gain follower			±6	mV
Input bias current	Iib				1.0	nA
Common-mode input voltage range	Vcmr	For CMRR≥45dB	0.00		1.2	V
Maximum output voltage swing	Vouts	Vid=100mV, RL=10kΩ to Vss	2.90			V
Large-signal voltage gain	Avd	RL=10kΩ to Vss		85		dB
Common-mode rejection ratio	CMRR	RL=10kΩ to Vss		65		dB
Supply voltage rejection ratio	PSRR	RL=10kΩ to Vss Vdd=2.7V to 6.0V		85		dB
Current consumption	Iss	Vin+=Vdd/2, Unity gain follower		270	400	μA
Unity gain bandwidth	GBW			1.0		MHz
Slew rate	SR	RL=100kΩ, CL=20pF	0.55	0.85		V/μs

■ General description

V91xx1xA is CMOS PFM control step-up DC-DC converter; V91xx3xA is CMOS PFM control step- up DC-DC controller, which has large output current capacity by using an external FET switch.V91 series consists of reference voltage source, error amplifier, oscillation circuit, start-up circuit, PFM-control circuit,switching current limit circuit (V91xx1xA only), switching transistor (V91xx1xA only) and output voltage setting resistor. For external parts, coil, diode, MOSFET and capacitor are possible choices. The standard output voltages are 1.8V,3.0V,3.3V,5.0V; V91 series can also be designed as semi-custom IC within the range of 1.8V to 5.5V by 0.1V step.

■ Features

- Output voltage range : 1.8V to 5.5V
- Low voltage operation : 0.9V(V91xx1xA: Iout=1mA)
- Oscillating frequency : Typ.100kHz
- Low power operation : Typ.40µW(V91301xA: Typ.100kHz)
- High efficiency : 85%(V9130xxA: Vin=1.5V, Iout=10mA)
- Output current(e.g.) : 100mA(Vin=1.5V, Vout=3.0V)
- Package : SOT-89, SOT-23, SC-70(SOT-323)

■ Application

- Constant voltage source for battery-operated devices
- Portable communication equipments and video recorders

■ Maximum absolute ratings

Parameter	Symbol	Limit	Unit
Apply voltage to LX pin	Vlx	Vss-0.3 to 7.0	V
Apply voltage to VOUT pin	Vout	Vss-0.3 to 7.0	V
Output current of LX pin	Ilx	500	mA
Output current of EXT pin	Iext	20	mA
Power dissipation	Pd	500 (SOT-89)	mW
		250 (SOT-23)	
		150 (SC-70)	
Operationg temperature	Top	-40 to +85	°C
Storage temperature	Tstg	-55 to +125	°C

■ Selection guide

V91xxxxA-x

Symbol		
a , b	Output voltage	e.g. : 18: Vout=1.8V 30:Vout=3.0V 33: Vout=3.3V 50: Vout=5.0V
c	Switching transistor	1: Internal switch 3: External switch
d	PackageB	A: SOT-89 B: SOT-23 C: SC-70(SOT-323)
e	Product version	A
f	Taping direction	S , N: Refer to PKG file

V91 x x x x A - x
↑ ↑ ↑ ↑ ↑ ↑
a b c d e f

■ Pin configuration

SOT-89(TOP VIEW)

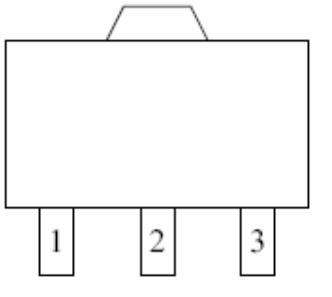

V91xx1AA, V91xx3AA

Pin No.	Pin name
1	VSS
2	VOUT
3	V91xx1AA: LX V91xx3AA: EXT

SOT-23(TOP VIEW)

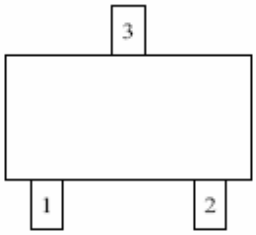

V91xx1BA, V91xx3BA

Pin No.	Pin name
1	VSS
2	V91xx1BA: LX V91xx3BA: EXT
3	VOUT

SC-70(TOP VIEW)

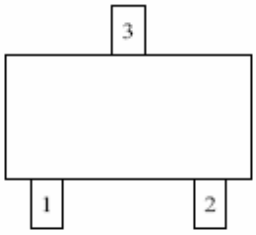

V91xx1CA, V91xx3CA

Pin No.	Pin name
1	VSS
2	V91xx1CA: LX V91xx3CA: EXT
3	VOUT

■ Standard circuit

V91xx1xA

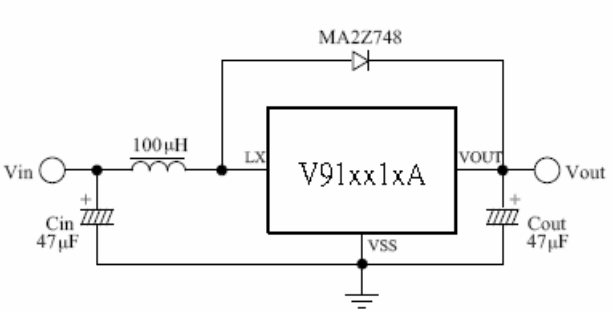

V91xx3xA

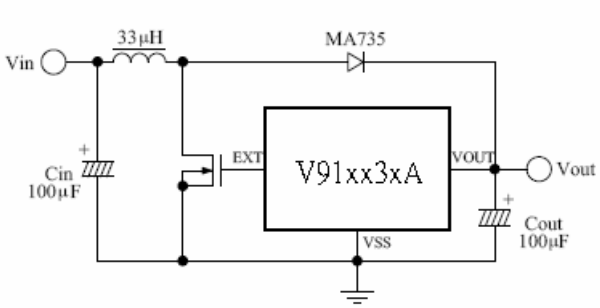

■ Block diagram

V91xx1x A

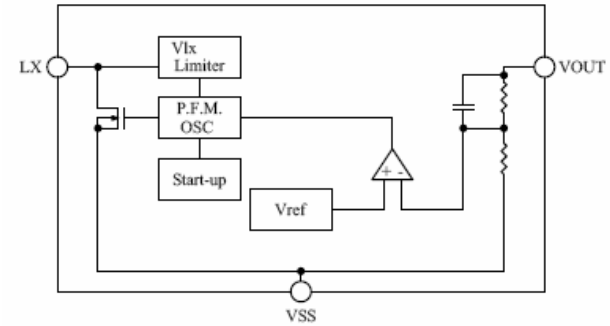

V91xx3x A

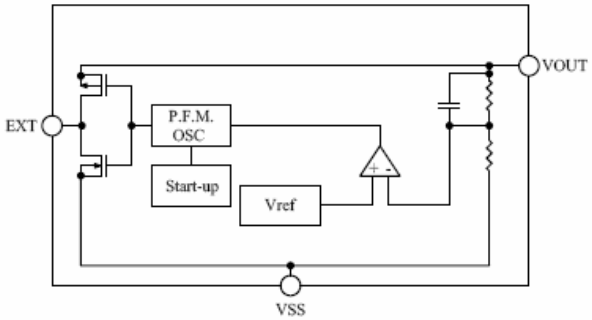

■ Electrical characteristics (V91xx1xA)

L=100μH, Cin=Cout=47μF, D=MA2Z748, Vss=0V, Top=25°C

Parameter	Symbol	Condition	Min.	Typ.	Max.	Unit
Output voltage	Vout	Vout=1.8V : Iout=1mA,Vin=1.5V	1.755	1.800	1.845	V
		Vout=3.0V : Iout=1mA,Vin=1.5V	2.925	3.000	3.075	
		Vout=3.3V : Iout=1mA,Vin=1.5V	3.218	3.300	3.382	
		Vout=5.0V : Iout=1mA,Vin=3.0V	4.875	5.000	5.125	
Input voltage	Vin		0.9		6.0	V
Starting voltage	Vst	Iout=1mA			0.9	V
Holding voltage	Vhold	Iout=1mA			0.7	V
Current consumption 1	Iss1	Vout=1.8V : Vout=Vout(T)×0.95		10	25	μA
		Vout=3.0V : Vout=Vout(T)×0.95		14	35	
		Vout=3.3V : Vout=Vout(T)×0.95		15	35	
		Vout=5.0V : Vout=Vout(T)×0.95		20	45	
Current consumption 2	Iss2	Vout=Vout(T)+0.5V		2	5	μA
On-resistance of LX switch	Ron	Vout=1.8V : Vout=Vout(T)×0.95		1.5	3.0	Ω
		Vout=3.0V : Vout=Vout(T)×0.95		0.9	1.9	
		Vout=3.3V : Vout=Vout(T)×0.95		0.9	1.9	
		Vout=5.0V : Vout=Vout(T)×0.95		0.7	1.5	
Leakage current of LX pin	I1x1	Vout=Vlx=6V			1	μA
Oscillating frequency	Fosc	Vout=Vout(T)×0.95	80	100	120	kHz
Voltage limit of LX pin (LX switch ON)	Vlxlim	Vout=Vout(T)×0.95	0.5	0.7	0.9	V
Duty ratio	Duty	Vout=Vout(T)×0.95	67	75	83	%

*Vout: Input voltage to out pin;
Vout(T): Typ. value of Vout.

■ Electrical characteristics (V91xx3xA)

FET=V37400FA,L=33μH,Cin=Cout=100μF,D=MA735, Vss=0V, Top=25°C

Parameter	Symbol	Condition	Min.	Typ.	Max.	Unit
Output voltage	Vout	Vout=1.8V : Iout=1mA,Vin=1.5V	1.755	1.800	1.845	V
		Vout=3.0V : Iout=1mA,Vin=1.5V	2.925	3.000	3.075	
		Vout=3.3V : Iout=1mA,Vin=1.5V	3.218	3.300	3.382	
		Vout=5.0V : Iout=1mA,Vin=3.0V	4.875	5.000	5.125	
Input voltage	Vin		0.9		6.0	V
Starting voltage	Vst	Iout=1mA			1.1	V
Holding voltage	Vhold	Iout=1mA			0.7	V
Current consumption 1 (EXT:No-Load)	Iss1	Vout=1.8V : Vout=Vout(T)×0.95		10	25	μA
		Vout=3.0V : Vout=Vout(T)×0.95		14	35	
		Vout=3.3V : Vout=Vout(T)×0.95		15	35	
		Vout=5.0V : Vout=Vout(T)×0.95		20	45	
Current consumption 2	Iss2	Vout=Vout(T)+0.5V		2	5	μA
On-resistance of ELT "High"	Rexth	Vout=1.8V : Vout=Vout(T)×0.95 Vout=Vout-0.4V		90	170	Ω
		Vout=3.0V : Vout=Vout(T)×0.95 Vout=Vout-0.4V		50	86	
		Vout=3.3V : Vout=Vout(T)×0.95 Vout=Vout-0.4V		46	83	
		Vout=5.0V : Vout=Vout(T)×0.95 Vout=Vout-0.4V		33	59	
On-resistance of ELT "Low"	Rext1	Vout=1.8V : Vout=Vout(T)×0.95 Vout=Vout-0.4V		70	120	μA
		Vout=3.0V : Vout=Vout(T)×0.95 Vout=Vout-0.4V		36	60	
		Vout=3.3V : Vout=Vout(T)×0.95 Vout=Vout-0.4V		33	55	
		Vout=5.0V : Vout=Vout(T)×0.95 Vout=Vout-0.4V		24	45	
Oscillating frequency	Fosc	Vout=Vout(T)×0.95	80	100	120	kHz
Duty ratio	Duty	Vout=Vout(T)×0.95	67	75	83	%

*Vout: Input voltage to out pin;
Vout(T): Typ. value of Vout.

■ General description

V92xxxx is CMOS PWM step-up DC/DC converter which consists of reference voltage source, error amplifier, oscillation circuit, start-up circuit, output voltage setting resistor, LX transistor and switching current limiter. For external parts, coil, diode and capacitor are possible choices; with external parts, V92 series is able to acquire constant output voltage higher than input voltage. The standard output voltages are 2.7V, 3.0V, 3.3V, and 5.0V; V92 series can also be designed as semi-custom IC within the range of 2.5V to 5.5V by 0.1V step. Meanwhile, 600kHz high frequency PWM control scheme makes it easy to design DC/DC converter which can generate large output current with high stability and small ripples by only using small external inductor. With newly developed intermittent operation control scheme, V92 series is able to work with high efficiency under wide range of load conditions.

■ Features

- Output voltage range : 2.5V to 5.5V (by 0.1V)
- Low voltage operation : Vin≥0.9V
- Oscillating frequency : Typ.600kHz
- Output current(e.g.) : 250mA(Vin=1.5V, Vout=3.0V)
- CE(Chip-enable pin)available : Max.0.5μA(V92xx2x Iss at shutdown)
- High efficiency : Typ.85%
- Switching current limiter
- Package : SOT-89, SOT-89-5

■ Application

- Constant voltage source for battery-operated devices
- Constant voltage source for PDAs, cameras, portable communications equipments and videos
- Local regulator

■ Maximum absolute ratings

Parameter	Symbol	Limit	Unit
Apply voltage to LX pin	Vlx	Vss-0.3 to 8.0	V
Apply voltage to VOUT pin	Vout	Vss-0.3 to 8.0	V
Apply voltage to CE pin	Vce	Vss-0.3 to 8.0	V
Power dissipation	Pd	300 (SOT-89)	mW
		500 (SOT-89-5)	
Operationg temperature	Top	-40 to +85	°C
Storage temperature	Tstg	-55 to +125	°C

■ Selection guide

V92xxxx-x

Symbol		
a , b	Output voltage	e.g. : 27: Vout=2.7V 30: Vout=3.0V 33: Vout=3.3V 50: Vout=5.0V
c	CE selection	1: No CE type (SOT-89) 2: CE type (SOT-89-5)
d	Package	B: SOT-89, SOT-89-5
e	Taping direction	S,N: Ref.P115

V92 x x x x - x
↑ ↑ ↑ ↑ ↑
a b c d e

■ Pin configuration

SOT-89(TOP VIEW)

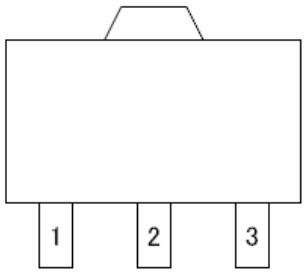

Pin No.	Pin name
1	VOUT
2	VSS
3	LX

SOT-89-5(TOP VIEW)

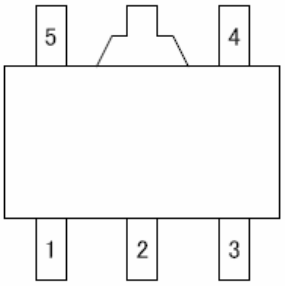

Pin No.	Pin name
1	VOUT
2	VSS
3	LX
4	NC
5	CE ("H"=active, "L"=shutdown)

■ Standard circuit

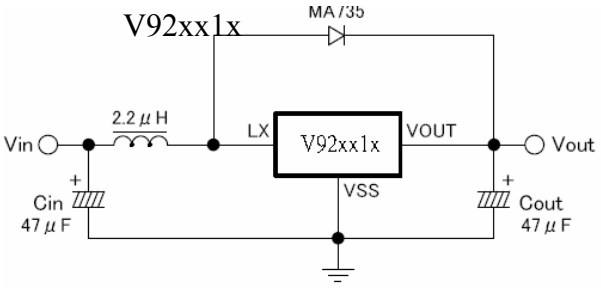

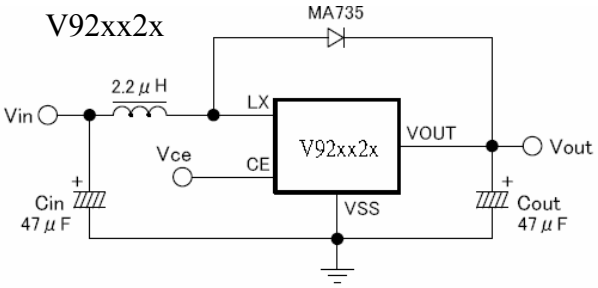

■ Block diagram

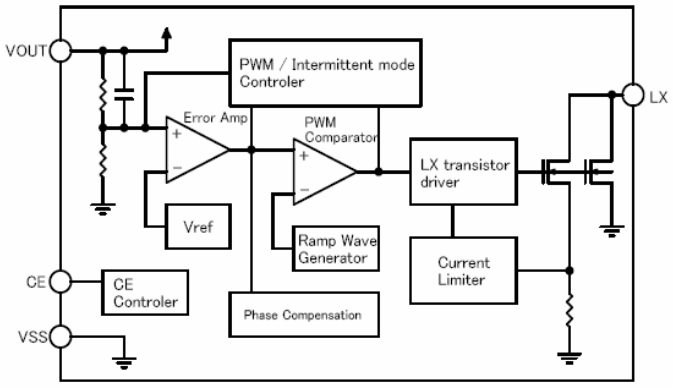

■ Electrical characteristics (v91xx1x)

L=2.2μH, Cout=47μF, D=MA735, Vss=0V, Top=25°C

Parameter	Symbol	Condition	Min.	Typ.	Max.	Unit
Input voltage	Vin				7	V
Starting voltage	Vst	No-load			0.9	V
Output voltage1	Vout1	V92271x : Iout=60mA, Vin=1.5V	2.633	2.700	2.767	V
		V92301x : Iout=60mA, Vin=1.5V	2.925	3.000	3.075	
		V92331x : Iout=60mA, Vin=1.5V	3.218	3.300	3.382	
		V92501x : Iout=60mA, Vin=3.0V	4.875	5.000	5.125	
Output voltage2	Vout2	V92271x, V92301x, V92331x : Iout=0.1mA, Vin=1.5V	Vout1 ×1.005	Vout1 ×1.010	Vout1 ×1.020	V
		V92501x : Iout=0.1mA, Vin=3.0V				
Current consumption1	Iss1	V92271x : Vout=Vout(T)×0.95		280	450	μA
		V92301x : Vout=Vout(T)×0.95		300	480	
		V92331x : Vout=Vout(T)×0.95		320	510	
		V92501x : Vout=Vout(T)×0.95		550	880	
Current consumption2	Iss2	V92271x : Vout=Vout(T)+0.5V		70	110	μA
		V92301x : Vout=Vout(T)+0.5V		75	120	
		V92331x : Vout=Vout(T)+0.5V		80	130	
		V92501x : Vout=Vout(T)+0.5V		90	145	
Oscillating frequency	Fosc	Vout=Vout(T)×0.95	510	600	690	kHz
Duty ratio	Duty	Vout=Vout(T)×0.95	80	88	95	%
Frequency of intermittent control	Fimt			12	17	kHz
On-resistance of LX switch	Ron	V92271x : Vout=Vout(T)×0.95		270	370	mΩ
		V92301x : Vout=Vout(T)×0.95		250	340	
		V92331x : Vout=Vout(T)×0.95		245	330	
		V92501x : Vout=Vout(T)×0.95		220	300	
Leakage current of LX switch	Ilxl	Vout=Vlx=7V			1	

* Vout : input voltage to VOUT pin
* Vout (T): typical value of Vout1

■ Electrical characteristics (V91xx2x)

Vce=Vout, L=2.2μH, Cout=47μF, D=MA735, Vss=0V, Top=25°C

Parameter	Symbol	Condition	Min.	Typ.	Max.	Unit
Input voltage	Vin				7	V
Starting voltage	Vst	No-load			0.9	V
Output voltage1	Vout1	V92272x : Iout=60mA, Vin=1.5V	2.633	2.700	2.767	V
		V92302x : Iout=60mA, Vin=1.5V	2.925	3.000	3.075	
		V92332x : Iout=60mA, Vin=1.5V	3.218	3.300	3.382	
		V92502x : Iout=60mA, Vin=3.0V	4.875	5.000	5.125	
Output voltage2	Vout2	V92272x, V92302x, V92332x : Iout=0.1mA, Vin=1.5V	Vout1 ×1.005	Vout1 ×1.010	Vout1 ×1.020	V
		V92502x : Iout=0.1mA, Vin=3.0V				
Current consumption1	Iss1	V92272x : Vout=Vout(T)×0.95		280	450	μA
		V92302x : Vout=Vout(T)×0.95		300	480	
		V92332x : Vout=Vout(T)×0.95		320	510	
		V92502x : Vout=Vout(T)×0.95		550	880	
Current consumption2	Iss2	V92272x : Vout=Vout(T)+0.5V		70	110	μA
		V92302x : Vout=Vout(T)+0.5V		75	120	
		V92332x : Vout=Vout(T)+0.5V		80	130	
		V92502x : Vout=Vout(T)+0.5V		90	145	
Current consumption in Shutdown	Isd	Vout=Vout(T)×0.95, Vce=0			0.5	μA
Oscillating frequency	Fosc	Vout=Vout(T)×0.95	510	600	690	kHz
Duty ratio	Duty	Vout=Vout(T)×0.95	80	88	95	%
Frequency of intermittent control	Fimt			12	17	kHz
On-resistance of LX switch	Ron	V92271x : Vout=Vout(T)×0.95		270	370	mΩ
		V92301x : Vout=Vout(T)×0.95		250	340	
		V92331x : Vout=Vout(T)×0.95		245	330	
		V92501x : Vout=Vout(T)×0.95		220	300	
Leakage current of LX switch	Ilxl	Vout=Vlx=7V			1	μA
CE Input voltage "H"	Vceh		0.8			V
CE Input voltage "L"	Vce1				0.25	V
CE Input current "H"	Iceh	Vout=Vout(T)×0.95, Vce= Vout(T)×0.95			0.1	μA
CE Input current "L"	Ice1	Vout=Vout(T)×0.95, Vce=0			-0.1	μA

* Vout : input voltage to VOUT pin
* Vout (T): typical value of Vout1
* Vce : input voltage to CE pin

■ General description

V93xxxB is CMOS step-up DC/DC converter which consists of reference voltage source,error amplifier, oscillation circuit, start-up circuit, PFM control circuit, switching transistor and output voltage setting resistor.
For external parts, coil, diode and capacitor are possible choices; with external parts, V93 series is able to acquire constant output voltage higher than input voltage. The standard output voltages are 2.7V,3.0V,and 3.3V;V93 series can also be designed as semi-custom IC within the range of 1.8V to 3.8V by 0.1V step.

■ Features

- Output voltage range : 1.8V to 3.8V (by 0.1V)
- Low voltage operation : Vin≥0.9V(RL=30kΩ)
- Low power operation : Typ.24μW(V9330xB)
- High efficiency : Typ.85%
- High output voltage accuracy : ±2.5%
- Output current (e.g.) : 40mA(Vin=1.5V, Vout=3.0V)
- Package : SOT-89, SOT-23

■ Application

- Constant voltage source for battery-operated devices
- Constant voltage source for cameras
- Portable communications equipments
- Local regulator

■ Maximum absolute ratings

Parameter	Symbol	Limit	Unit
Apply voltage to LX pin	Vlx	5	V
Apply voltage to VOUT pin	Vout	4	V
Apply current to LX pin	I1x	200	mA
Power dissipation	Pd	300 (SOT-89)	mW
		200 (SOT-23)	
Operationg temperature	Top	-40 to +85	°C
Storage temperature	Tstg	-55 to +125	°C

■ Selection guide

V93xxxB-x

Symbol		
a , b	Output voltage	e.g. : 27: Vout=2.7V 30: Vout=3.0V 33: Vout=3.3V
c	Package	1: SOT-89 2: SOT-23
d	Product version	B
e	Taping direction	S: Ref. P115,P114 N: Ref. P115,P114

V93 x x x B - x
↑ ↑ ↑ ↑ ↑
a b c d e

■ Pin configuration

SOT-89(TOP VIEW)

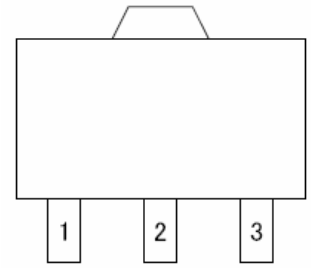

Pin No.	Pin name
1	VSS
2	VOUT
3	LX

SOT-23(TOP VIEW)

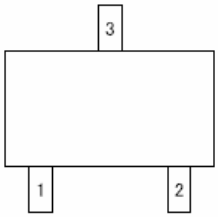

Pin No.	Pin name
1	VSS
2	LX
3	VOUT

■ Standard circuit

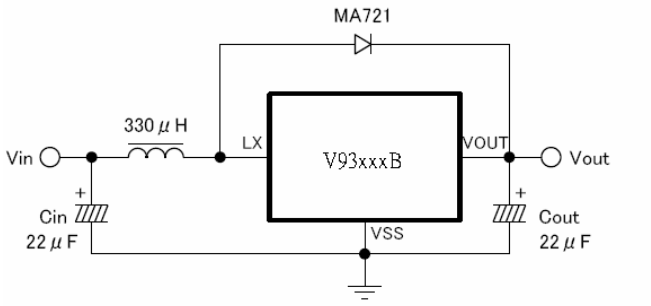

■ Block diagram

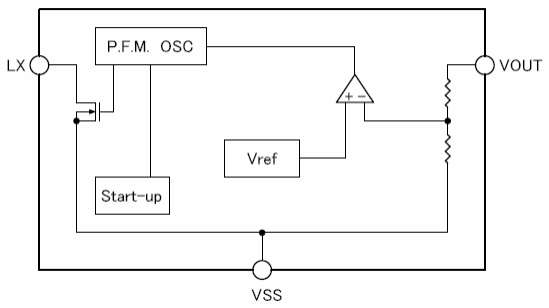

■ Electrical characteristics

L=330μH, Cin=Cout=22μF, D=MA721, Vss=0V, Top=25°C

Parameter	Symbol	Condition	Min.	Typ.	Max.	Unit
Starting voltage	Vst	RL=30kΩ			0.9	V
Holding voltage	Vhold	Iout=1mA			0.7	V
Current consumption	Iss	Iout=100μA		8.0	16.0	μA
Output voltage	Vout	V9327xB : Iout=1mA, Vin=1.5	2.63	2.70	2.77	V
		V9330xB : Iout=1mA, Vin=1.5	2.92	3.00	3.08	
		V9333xB : Iout=1mA, Vin=1.5	3.21	3.30	3.39	
Output current of LX pin	Ilx	V9327xB : Vout=2.6V, Vlx=0.4V	60			mA
		V9330xB : Vout=2.9V, Vlx=0.4V	70			
		V9333xB : Vout=3.2V, Vlx=0.4V	80			
Leakage current of LX pin	Ilxl	Vout=3.5V, Vlx=3.5V				μA
Oscillating frequency	Fosc	V9327xB : Vout=2.6V	80	100	120	kHz
		V9330xB : Vout=2.9V				
		V9333xB : Vout=3.2V				
Duty ratio	Duty	V9327xB : Vout=2.6V, Switch"ON"	65	75	85	%
		V9330xB : Vout=2.9V, Switch"ON"				
		V9333xB : Vout=3.2V, Switch"ON"				

■ General description

V94xxB is CMOS step-up DC/DC converter which consists of reference voltage source, error amplifier, oscillation circuit, start-up circuit, PFM control circuit, switching transistor and output voltage setting resistor. For external parts, coil, diode and capacitor are possible choices; with external parts, V94 series is able to acquire constant output voltage higher than input voltage. The standard output voltages are 2.7V, 3.0V, 3.3V, and 5.0V; V94 series can also be designed as semi-custom IC within the range of 2.5V to 5.5V by 0.1V step.

■ Features

- Output voltage range : 2.5V to 5.5V (by 0.1V)
- Low voltage operation : Vin≥0.98V(RL=30kΩ)
- Low power operation : Typ.12μW(V9430B)
- High efficiency : Typ.80%
- High output voltage accuracy : ±2.5%
- Output current (e.g.) : 20mA(Vin=1.5V, Vout=3.0V)
- Package : SOT-89

■ Application

- Constant voltage source for battery-operated devices
- Constant voltage source for cameras
- Portable communications equipments
- Local regulator

■ Maximum absolute ratings

Parameter	Symbol	Limit	Unit
Apply voltage to LX pin	Vlx	12	V
Apply voltage to VOUT pin	Vout	12	V
Apply current to LX pin	I1x	200	mA
Power dissipation	Pd	300	mW
Operationg temperature	Top	-40 to +85	°C
Storage temperature	Tstg	-55 to +125	°C

■ Selection guide

V94xxB-x

Symbol		
a , b	Output voltage	e.g. : 27: Vout=2.7V 30: Vout=3.0V 33: Vout=3.3V 50: Vout=5.0V
c	Product version	B
d	Taping direction	S: Ref. P115 N: Ref. P115

V94 x x B - x
↑↑↑ ↑
a b c d

■ Pin configuration

SOT-89(TOP VIEW)

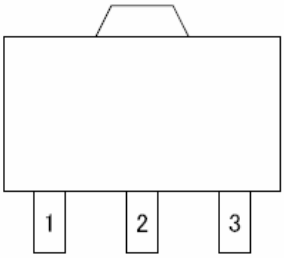

Pin No.	Pin name
1	VSS
2	VOUT
3	LX

■ Standard circuit

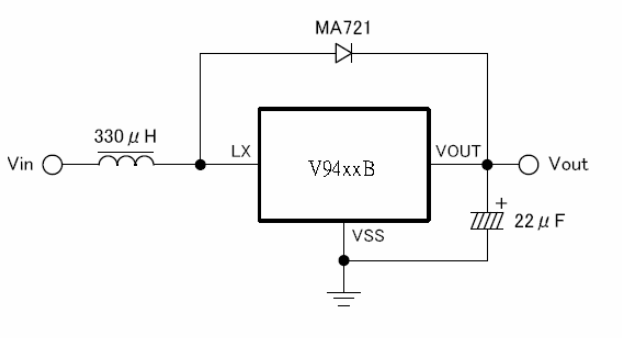

■ Block diagram

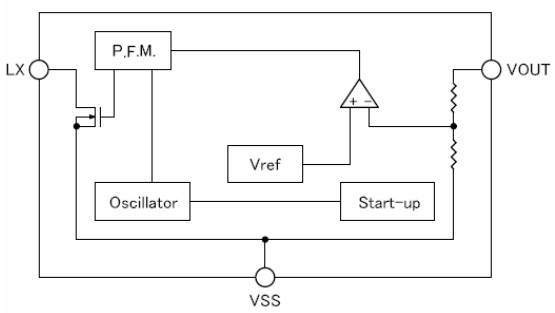

■ Electrical characteristics

L=330μH, D=MA721, C=22μF, Vss=0V, Top=25°C

Parameter	Symbol	Condition	Min.	Typ.	Max.	Unit
Input voltage	Vin				10	V
Starting voltage	Vst	V9427B : RL=27kΩ			0.98	V
		V9430B : RL=30kΩ				
		V9433B : RL=33kΩ				
		V9450B : RL=50kΩ				
Holding voltage	Vhold	V9427B : Iout=1mA			0.7	V
		V9430B : Iout=1mA			0.7	
		V9433B : Iout=1mA			0.7	
		V9450B : Iout=1mA			0.9	
Current consumption	Iss	V9427B : Iout=100μA, Vin=1.5V		3.5	7.0	μA
		V9430B : Iout=100μA, Vin=1.5V		4.0	8.0	
		V9433B : Iout=100μA, Vin=1.5V		4.5	9.0	
		V9450B : Iout=100μA, Vin=3.0V		7.0	14.0	
Output voltage	Vout	V9427B : Iout=1mA, Vin=1.5V	2.63	2.70	2.77	V
		V9430B : Iout=1mA, Vin=1.5V	2.91	3.00	3.08	
		V9433B : Iout=1mA, Vin=1.5V	3.21	3.30	3.39	
		V9450B : Iout=1mA, Vin=3.0V	4.87	5.00	5.13	
Output current of LX pin	Ilx	V9427B : Vout=2.6V, Vlx=0.4V	80			mA
		V9430B : Vout=2.9V, Vlx=0.4V	90			
		V9433B : Vout=3.2V, Vlx=0.4V	100			
		V9450B : Vout=4.8V, Vlx=0.4V	130			
Leakage current of LX pin	Ilxl	Vout=Vlx=10V			1.0	μA
Oscillating frequency	Fosc	V9427B : Vout=2.6V	22	35	55	kHz
		V9430B : Vout=2.9V				
		V9433B : Vout=3.2V				
		V9450B : Vout=4.8V	22	35	58	
Maximum duty ratio	Duty	V9427B : Vout=2.6V, Switch"ON"	45	55	65	%
		V9430B : Vout=2.9V, Switch"ON"				
		V9433B : Vout=3.2V, Switch"ON"				
		V9450B : Vout=4.8V, Switch"ON"	50	60	70	

■ General description

V95xxD series is CMOS PWM step-up DC/DC converter which consists of reference voltage source, error amplifier, oscillation circuit, start-up circuit, PWM control circuit, switch transistor and output voltage setting resistor. For external parts, coil, diode and capacitor are possible choices; with external parts, V95 series can acquire constant output voltage higher than input voltage. The standard output voltages are2.7V,3.0V,3.3V and 5.0V;V95 series can also be designed as semi-custom IC within the range of 2.5V to 5.5V by 0.1V step.With newly-developed PWM control circuit, V95 series is able to modulate switching time smoothly with constant frequency and consequently generates stable output with small ripples.

■ Features

- Output voltage range : 2.5V to 5.5V (by 0.1V)
- Low voltage operation : Vin≥0.98V(RL=30kΩ)
- Low power operation : Typ.35μW(V9430B)
- High efficiency : Typ.85%
- High output voltage accuracy : ±2.5%
- Output current (e.g.) : 10mA(Vin=1.5V, Vout=3.0V)
- Constant output frequency : Typ.55kHz
- Small ripples
- Package : SOT-89

■ Application

- Constant voltage source for battery-operated devices
- Constant voltage source for cameras
- Portable communications equipments
- Local regulator

■ Maximum absolute ratings

Parameter	Symbol	Limit	Unit
Apply voltage to LX pin	Vlx	12	V
Apply voltage to VOUT pin	Vout	12	V
Output current of LX pin	I1x	200	mA
Power dissipation	Pd	300	mW
Operating temperature	Top	-40 to +85	°C
Storage temperature	Tstg	-55 to +125	°C

■ Selection guide

V95xxD-x

Symbol		
a , b	Output voltage	e.g. : 27: Vout=2.7V 30: Vout=3.0V 33: Vout=3.3V 50: Vout=5.0V
c	Product version	D
d	Taping direction	S,N : Ref. P115

V95 x x D - x
↑↑↑ ↑
a b c d

■ Pin configuration

SOT-89(TOP VIEW)

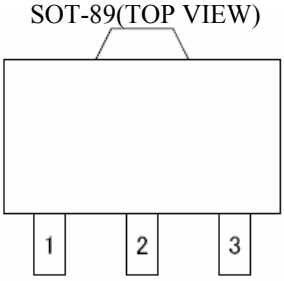

Pin No.	Pin name
1	VSS
2	VOUT
3	LX

■ Standard circuit

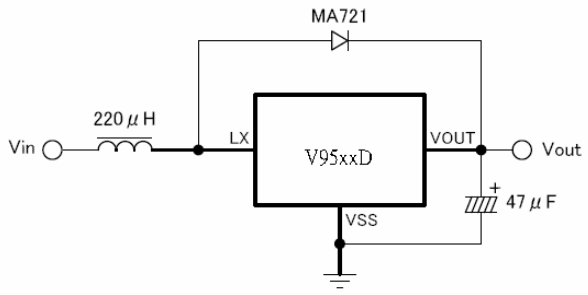

■ Block diagram

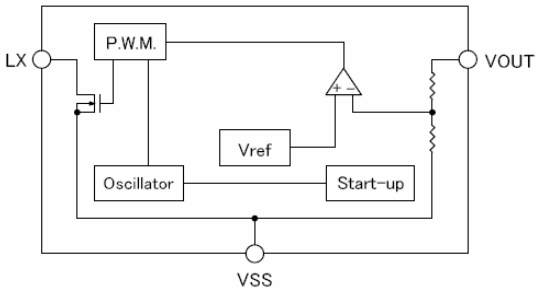

■ Electrical characteristics

L=220μH, D=MA721, C=47μF, Vss=0V, Top=25°C

Parameter	Symbol	Condition	Min.	Typ.	Max.	Unit
Input voltage	Vin				10	V
Starting voltage	Vst	V9427D : RL=27kΩ			0.98	V
		V9430D : RL=30kΩ				
		V9433D : RL=33kΩ				
		V9450D : RL=50kΩ				
Holding voltage	Vhold	V9427D : Iout=1mA			0.7	V
		V9430D : Iout=1mA			0.7	
		V9433D : Iout=1mA			0.7	
		V9450D : Iout=1mA			0.9	
Current consumption	Iss	V9427D : Vin=1.5V		9.0	18.0	μA
		V9430D : Vin=1.5V		12.0	20.0	
		V9433D : Vin=1.5V		14.0	23.0	
		V9450D : Vin=3.0V		30.0	45.0	
Output voltage	Vout	V9427D : Iout=1mA, Vin=1.5V	2.63	2.70	2.77	V
		V9430D : Iout=1mA, Vin=1.5V	2.92	3.00	3.08	
		V9433D : Iout=1mA, Vin=1.5V	3.21	3.30	3.39	
		V9450D : Iout=1mA, Vin=3.0V	4.87	5.00	5.13	
Output current of LX pin	Ilx	V9427D : Vout=2.6V, Vlx=0.4V	70			mA
		V9430D : Vout=2.9V, Vlx=0.4V	80			
		V9433D : Vout=3.2V, Vlx=0.4V	80			
		V9450D : Vout=4.8V, Vlx=0.4V	110			
Leakage current of LX pin	Ilxl	Vout=Vlx=10V			1.0	μA
Oscillating frequency	Fosc	V9427D : Vout=2.6V	35	55	75	kHz
		V9430D : Vout=2.9V				
		V9433D : Vout=3.2V				
		V9450D : Vout=4.8V				
Maximum duty ratio	Duty	V9427D : Vout=2.6V	45	60	75	%
		V9430D : Vout=2.9V				
		V9433D : Vout=3.2V				
		V9450D : Vout=4.8V				

■ General description

V75xxxxB is CMOS voltage detector provides lower current consumption-Typ.0.6μA(Vdd=4.5V) and higher accuracy (±2.0%) of detection voltage. It consists of very low-power-consumption reference voltage source, hysteresis comparator, output driver and detection voltage setting resistor. The output is positive logic; therefore, the output becomes low level when Vdd is lower than detection voltage. There are two output styles of V75 series: N-ch opendrain and CMOS output. The standard voltages are 2.2V, 2.7V. and 3.5V; V75 series can also be made as semi-custom IC within the range of 1.4V to 5.5V by 0.1V step.

■ Features

- Detection voltage range : 1.4V to 5.5V (by 0.1V)
- Low current consumption : Typ.0.6μA(Vdd=4.5V)
- Low voltage operation : Reset operation assured at 0.8V
- Accuracy of detection voltage : ±2.0%
- Low temperature coefficient : Typ.+100ppm/°C
- Package : SOT-89, SOT-23, SC-82AB
  SC-70(SOT-323)

■ Application

- Reset for microcomputers
- Voltage power shortage detectors
- Switch of back up power source
- Battery checkers

■ Maximum absolute ratings

Parameter	Symbol	Limit	Unit
Power supply voltage	Vlx	10	V
Output voltage	Vout	N-ch : Vss-0.3 to +10	V
		CMOS : Vss-0.3 to Vdd+0.3	
Output current	Iout	20	mA
Power dissipation	Pd	500 (SOT-89)	mW
		250 (SOT-23)	
		150 (SC-82AB)	
		150 (SC-70)	
Operationg temperature	Top	-40 to +85	°C
Storage temperature	Tstg	-55 to +125	°C

■ Selection guide

V75xxxxB-x

Symbol		
a , b	Detection voltage	e.g. : 22: Vdetn=2.2V 23: Vdetn=2.3V 24: Vdetn=2.4V 27: Vdetn=2.7V 30: Vdetn=3.0V 35: Vdetn=3.5V 40: Vdetn=4.0V
c	Output form	N: N-ch opendrain C: CMOS
d	Package	A: SOT-89 B: SOT-23 C: SC-82AB E: SC-70(SOT-323) D: SOT-89(Reverse pin configuration)
e	Product version	B
f	Taping direction	S, N: Refer to PKG file

V75 x x x x B - x
↑↑↑↑↑ ↑
a b c d e f

■ Pin configuration

SOT-89(TOP VIEW)

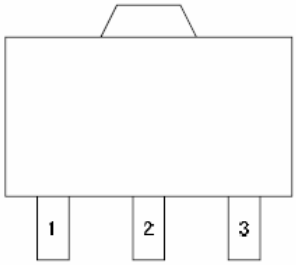

Pin No.	Pin name 75xxxAB	Pin name 75xxxDB
1	OUT	VDD
2	VDD	VSS
3	VSS	OUT

SOT-23(TOP VIEW)

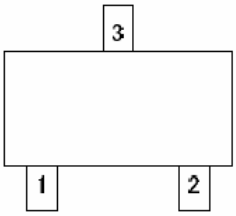

Pin No.	Pin name
1	OUT
2	VSS
3	VDD

SC-82AB(TOP VIEW)

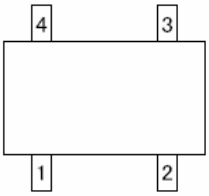

Pin No.	Pin name
1	OUT
2	VDD
3	NC
4	VSS

SC-70(TOP VIEW)

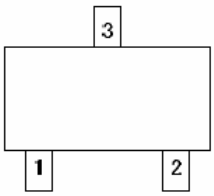

Pin No.	Pin name
1	OUT
2	VSS
3	VDD

■ Standard circuit

N-ch Open drain output

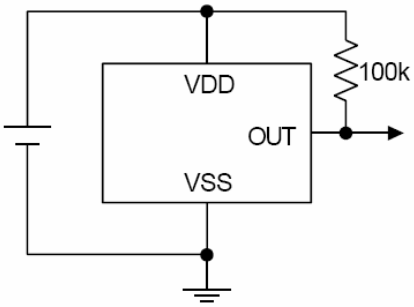

CMOS Output

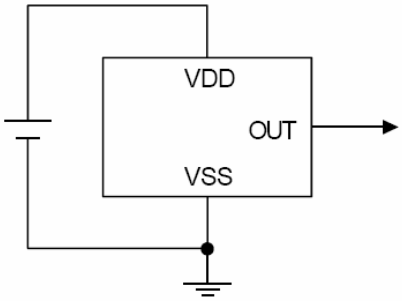

■ Block diagram

N-ch Output

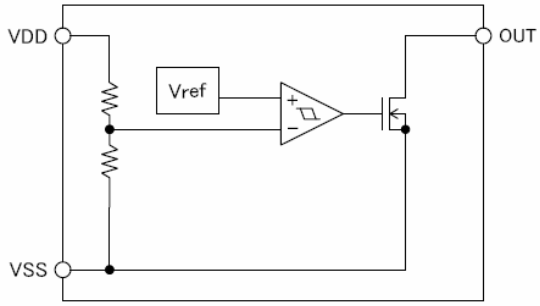

CMOS Output

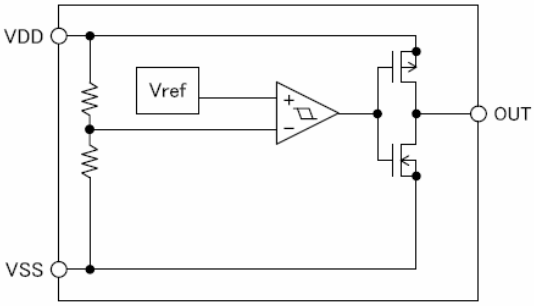

■ Timing chart

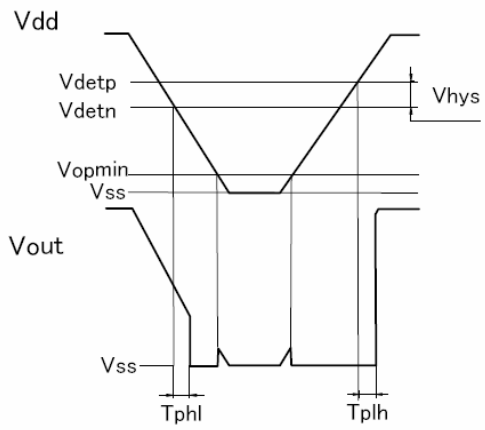

■ Electrical characteristics

Top=25°C Ioutp

Parameter	Symbol	Condition	Min.	Typ.	Max.	Unit
Detection voltage	Vdetn		2.156	2.200	2.244	V
		Vdetn=2.3V	2.254	2.300	2.346	
		Vdetn=2.4V	2.352	2.400	2.448	
		Vdetn=2.7V	2.646	2.700	2.754	
		Vdetn=3.0V	2.940	3.000	3.060	
		Vdetn=3.5V	3.430	3.500	3.570	
		Vdetn=4.0V	3.920	4.000	4.080	
Hysteresis width	Vhys		Vdetn ×0.02	Vdetn ×0.04	Vdetn ×0.08	V
Current consumption	Iss	Vdetn=2.2V to 2.4V : Vdd=3.0V		0.6	2.0	μA
		Vdetn=2.7V to 4.0V : Vdd=4.5V				
Power voltage	Vdd		0.8		6.0	V
Output current	Ioutn	Vdd=0.95V, Vds=0.4V	0.03	0.12		mA
		Vdd=1.40V, Vds=0.4V	0.60	1.40		
	Ioutp	Vdetn=2.2V to 2.4V : Vdd=3.0V, Vds=0.4V	0.15	0.40		
		Vdetn=2.7V to 4.0V : Vdd=4.5V, Vds=0.4V	0.20	0.60	`	
Delay time	Tplh	Vdetn=2.2V to 2.4V : Vdd=0.95V to 3.00V		10		μs
		Vdetn=2.7V to 4.0V : Vdd=0.95V to 4.50V				
	Tphl	Vdetn=2.2V to 2.4V : Vdd=3.00V to 0.95V		10		
		Vdetn=2.7V to 4.0V : Vdd=4.50V to 0.95V				
Temperature characteristic of Vdetn	$\frac{\Delta Vdetn}{\Delta Top}$	Top=-40°C to +85°C		+100		ppm/°C

* Ioutp cannot be applied to N-ch opendrain output products.

■ General description

V76xxxxB is CMOS voltage detector IC with delay function; external capacitor is unnecessary for the delay time circuit. There are 4 types of delay time selection of V76series: Typ.250ms, Typ.500ms, Typ.150ms, and Typ.50ms. The output pin of V76series is only available in CMOS; two output logic modes are available: RESET and RESET. The output level is high for RESET mode and low for RESET mode when Vdd is lower than detection voltage. The standard detection voltages are 2.2V, 3.0V, 4.8V and V76 series can also be made as semi-custom ICs within the range of 1.9V to 4.8V by 0.1V step.

■ Features

- Detection voltage range : 1.9V to 4.8V (by 0.1V)
- Low current consumption : Typ.7μA
- Accuracy of detection voltage : ±2.0%
- Delay time after Vdd recovery : Typ.250ms, Typ.500ms Typ.150ms, Typ.50ms
- Hysteresis voltage : Typ.Vdetn×1.04
- Package : SOT-23

■ Application

- Reset for microcomputers
- Voltage power shortage detectors
- Switch of back up power source
- Battery checkers

■ Maximum absolute ratings

Parameter	Symbol	Limit	Unit
Power supply voltage	Vlx	10	V
Output voltage	Vout	Vss-0.3 to Vdd+0.3	V
Output current	Iout	20	mA
Power dissipation	Pd	200	mW
Operationg temperature	Top	-40 to +85	°C
Storage temperature	Tstg	-55 to +125	°C

■ Selection guide

V76xxxxB-x

Symbol		
a , b	Detection voltage	e.g. : 27: Vdetn=2.7V 30: Vdetn=3.0V 40: Vdetn=4.0V
c	Output form	L: $\overline{\text{RESET}}$ output mode H: RESET output mode
d	Delay time	A: Typ.250ms, B: Typ.500ms C: Typ.150ms, D: Typ.50ms
e	Product version	B
f	Taping direction	S: Refer to PKG file N: Refer to PKG file

V76 x x x x B - x
↑ ↑ ↑ ↑ ↑ ↑
a b c d e f

■ Pin configuration

SOT-23(TOP VIEW)

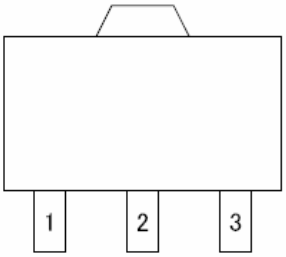

Pin No.	Pin name
1	VSS
2	VOUT
3	LX

■ Timing chart

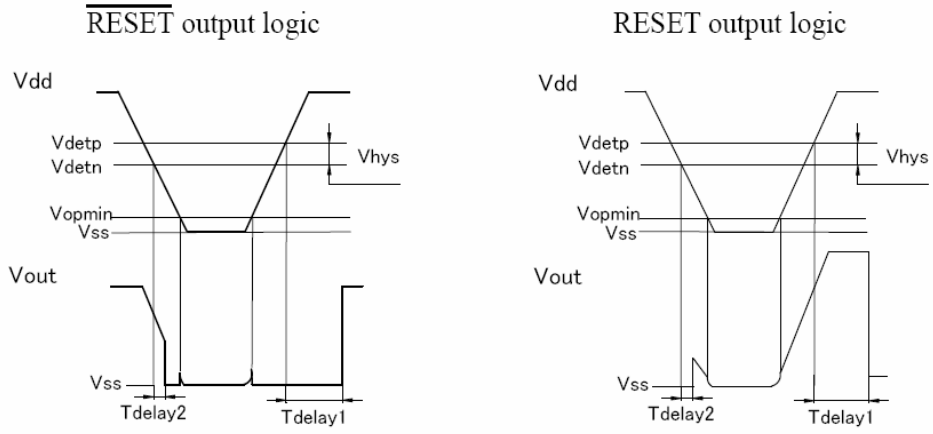

* For $\overline{\text{RESET}}$ (V76xxLxB) output logic products, V recommends making the rising rate of Vdd slower than 10V/µs, or installing a capacitor larger than 0.001µF between VSS and OUT terminals.

■ Block diagram

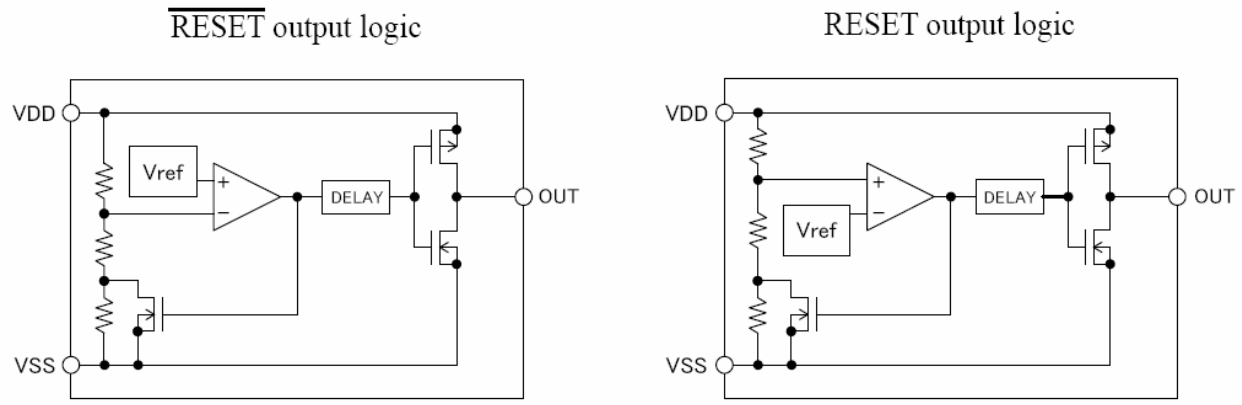

■ Electrical characteristics

Top=25°C

Parameter	Symbol	Condition	Min.	Typ.	Max.	Unit
Detection voltage	Vdetn	Vdetn=2.7V	2.646	2.700	2.754	V
		Vdetn=3.0V	2.940	3.000	3.060	
		Vdetn=4.0 V	3.920	4.000	4.080	
Hysteresis width	Vhys	Vdetn=2.7V	Vdetn×0.02	Vdetn×0.02	Vdetn×0.02	V
		Vdetn=3.0V	Vdetn×0.02	Vdetn×0.02	Vdetn×0.02	
		Vdetn=4.0 V	Vdetn×0.02	Vdetn×0.02	Vdetn×0.02	
Current consumption	Iss	Vdetn=2.7V:Vdd=4.5V		7.0	14.0	μA
		Vdetn=3.0V:Vdd=4.5V				
		Vdetn=4.0V:Vdd=4.5V				
Power voltage	Vdd		1.000		6.000	V
$\overline{\text{RESET}}$ output current	Ioutn	Vdd=1.0V, Vds=0.3V	0.05	0.17		mA
		Vdd=2.0V, Vds=0.4V	1.50	3.20		
	Ioutp	Vdetn=2.7V:Vdd=4.5V, Vds=0.4V	0.6	1.5		
		Vdetn=3.0V:Vdd=4.5V, Vds=0.4V	0.6	1.5		
		Vdetn=4.0V:Vdd=4.5V, Vds=0.4V	0.6	1.5		
RESET output curernt	Ioutn	Vdetn=2.7V:Vdd=4.5V, Vds=0.4V	3.5	8.0		mA
		Vdetn=3.0V:Vdd=4.5V, Vds=0.4V	3.5	8.0		
		Vdetn=4.0V:Vdd=4.5V, Vds=0.4V	3.5	8.0		
	Ioutp	Vdd=2.0V, Vds=0.4V	0.2	0.6		
Delay time(50ms)	Tdelay1	Vdetn=2.7V : Vdd=1.0V to 4.5V	40	50	60	ms
		Vdetn=3.0V : Vdd=1.0V to 4.5V				
		Vdetn=4.0V : Vdd=1.0V to 4.5V				
	Tdelay2	Vdetn=2.7V : Vdd=4.5V to 1.0V		10		μs
		Vdetn=3.0V : Vdd=4.5V to 1.0V				
		Vdetn=4.0V : Vdd=4.5V to 1.0V				
Delay time(150ms)	Tdelay1	Vdetn=2.7V : Vdd=1.0V to 4.5V	120	150	180	ms
		Vdetn=3.0V : Vdd=1.0V to 4.5V				
		Vdetn=4.0V : Vdd=1.0V to 4.5V				
	Tdelay2	Vdetn=2.7V : Vdd=4.5V to 1.0V		10		μs
		Vdetn=3.0V : Vdd=4.5V to 1.0V				
		Vdetn=4.0V : Vdd=4.5V to 1.0V				
Delay time(250ms)	Tdelay1	Vdetn=2.7V : Vdd=1.0V to 4.5V	200	250	300	ms
		Vdetn=3.0V : Vdd=1.0V to 4.5V				
		Vdetn=4.0V : Vdd=1.0V to 4.5V				
	Tdelay2	Vdetn=2.7V : Vdd=4.5V to 1.0V		10		μs
		Vdetn=3.0V : Vdd=4.5V to 1.0V				
		Vdetn=4.0V : Vdd=4.5V to 1.0V				
Delay time(500ms)	Tdelay1	Vdetn=2.7V : Vdd=1.0V to 4.5V	400	500	600	ms
		Vdetn=3.0V : Vdd=1.0V to 4.5V				
		Vdetn=4.0V : Vdd=1.0V to 4.5V				
	Tdelay2	Vdetn=2.7V : Vdd=4.5V to 1.0V		10		μs
		Vdetn=3.0V : Vdd=4.5V to 1.0V				
		Vdetn=4.0V : Vdd=4.5V to 1.0V				
Temperature characteristic of Vdetn	$\frac{\Delta Vdetn}{\Delta Top}$	Top=-40°C to +85°C		+100		ppm/°C

■ General description

V77xxxxBC is CMOS voltage detector which consists of two comparator circuits watching Vdd level and Vdet input level simultaneously and independently. This configuration enables output to maintain the status of detdction even when voltage of the Vdet input level drops to 0V. The output configuration is N-channel open-drain.

■ Features

- Detection voltage range : Vdetn1 (Vdet) 0.8V to 5.0V (by0.1V)
  Vdetn2 (Vdd) 1.1V to 5.0V (by0.1V)
- Low current consumption : Typ.1.5μA(Vdd=3.0V)
- High accuracy of detection voltage : ±2.0%(Vdetn1,2>1.5V)
  ±30mV(Vdetn1,2≤1.5V)
- Temperature coefficient : Typ.±100ppm/°C
- Hysteresis voltage : N-ch open-drain
- Package : SOT-25

■ Application

- Reset for microcomputers
- Voltage power shortage detectors
- Switch of back up power source
- Battery checkers

■ Maximum absolute ratings

Parameter	Symbol	Limit	Unit
Power supply voltage	Vdd	Vss-0.3 to 10.0	V
Input voltage(for detection voltage)	Vdet	Vss-0.3 to 10.0	V
Output voltage	Vout1	Vss-0.3 to 10.0	V
	Vout2		
Output current	Iout1	25	mA
	Iout2		
Power dissipation	Pd	250	mW
Operationg temperature	Top	-40 to +85	°C
Storage temperature	Tstg	-55 to +125	°C

■ Selection guide

V77xxxxBC-x

Symbol		
a , b	Detection voltage2	e.g. :22: Vdetn2=2.2V
c,d	Detection voltage1	e.g. :11: Vdetn2=1.1V
e	Package	B:SOT-25
f	Product version	C
g	Taping direction	S: Ref.P114 N:Ref.P114

V77 x x x x BC - x
↑ ↑ ↑ ↑ ↑ ↑ ↑
a b c d e f g

■ Pin configuration

SOT-25(TOP VIEW)

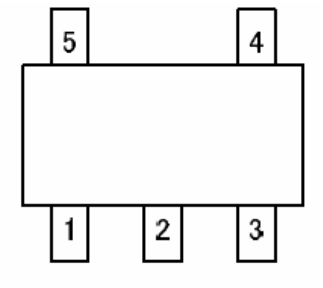

Pin No.	Pin name
1	OUT1
2	VDD
3	VSS
4	VDET
5	OUT2

■ Operating timing chart

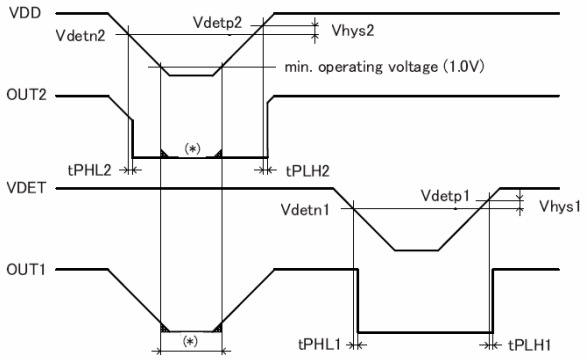

■ Block diagram

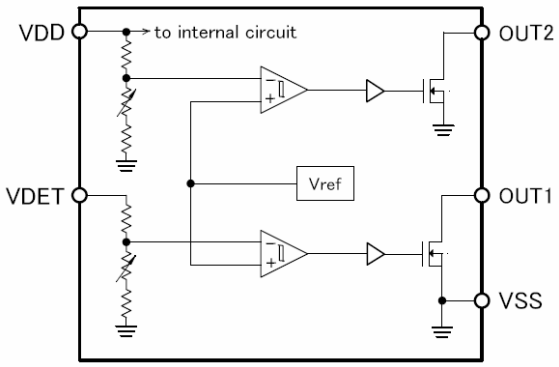

■ e.g.) Application circuit

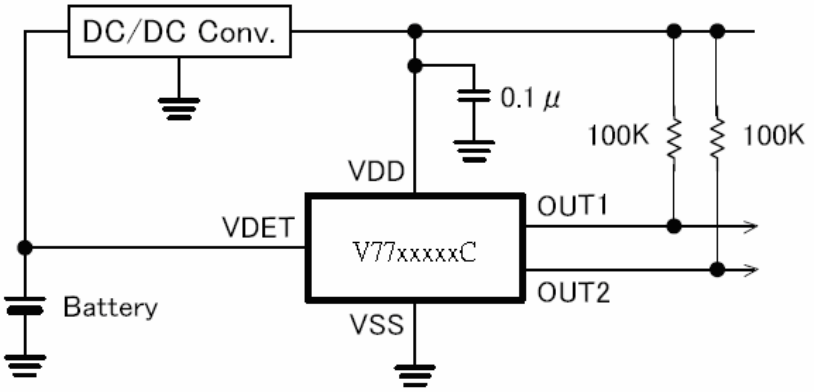

■ Electrical characteristics

V772211BC Top=25°C

Parameter	Symbol	Condition	Min.	Typ.	Max.	Unit
Detect delay 1		Vdd=6.0V, Vdet=6.0V→1.0V		30		μs
Detect delay 2		Vdd=6.0V→0.8V		30		μs
Release delay 1		Vdd=6.0V, Vdet=1.0V→6.0V		30		μs
Release delay 2		Vdd=0.8V→6.0V		30		μs
Current consumption1		Vdd=Vdetn2×0.9 Vdet=×0.9		1.5	3.5	μA
Current consumption2		Vdd=Vdetn2×1.1 Vdet=Vdetn1×1.1		2.0	4.5	μA
Nch driver leakage current1		Vdd=6.0V, Vdet=6V, Vout1=6.0		0.2	0.4	μA
Nch driver leakage current2		Vdd=6.0V, Vdet=6V, Vout2=6.0		0.2	0.4	μA
Operating voltage	Vdd		0.8		6.0	V
Detection voltage1	Vdetn1	Vdd=1.5V, Pullup 3.0V , R=100kΩ	1.070	1.100	1.130	V
Detection voltage2	Vdetn2	Pullup 3.0V, R=100kΩ	2.156	2.200	2.244	V
Hysteresis width1		Vdd=1.0V,Vds=0.5V	Vdetn1 ×0.02	Vdetn1 ×0.05	Vdetn1 ×0.08	V
Hysteresis width2		Vdd=1.0V,Vds=0.5V	Vdetn2 ×0.02	Vdetn2 ×0.05	Vdetn2 ×0.08	V
Temperature Characteristic of Vdetn	$\frac{\Delta Vdetn}{\Delta Top}$	Top=-40°C to +85°C		±100		ppm/°C
Sense resistance		Vdd=5.0V,Vdd=0V	8	10		MΩ
Output current1	Ioutn1	Vdd=1.0V, Vds=0.5V	0.1	0.7		mA
Output current2		Vdd=1.0V, Vds=0.5V	0.1	0.7		mA

■ General description

V97xxxxB is CMOS voltage detector IC which consists of very-low-power-consumption reference voltage source comparator, output driver, hysteresis circuit and detection voltage setting resistor. Because of positive logic output the output becomes low level when Vdd is lower than detection voltage. There are 2 types of output style of V97 series: N-ch opendrain and CMOS output. V97 series can be made as semi-custom IC within the range of 0.9V to 5.5V(N-ch) and 1.6V to 5.5V(CMOS) by 0.1V step.

■ Features

- Detection voltage range : N-ch 0.9V to 5.5V (by 0.1V)
  CMOS 1.6V to 5.5V (by 0.1V)
- Low voltage operation : Reset operation assured at 0.8V
- Low current consumption : Typ.1μA(Vdd=1.5V)
- Accuracy of detection voltage : ±2.5%
- Temperature coefficient : Typ.-300ppm/°C(Vdetn<2V)
  Typ.-100ppm/°C(Vdetn≥2V)
- Package : SOT-89, SOT-23

■ Application

- Reset for microcomputers
- Voltage power shortage detectors
- Switch of back up power source
- Battery checkers

■ Maximum absolute ratings

Parameter	Symbol	Limit	Unit
Power supply voltage	Vdd	10	V
Output voltage	Vout	N-ch : Vss-0.3 to +10°C	V
		CMOS : Vss-0.3 to Vdd+0.3	
Output current	Iout	50	mA
Power dissipation	Pd	300 (SOT-89)	mW
		200 (SOT-23)	
Operationg temperature	Top	-40 to +85	°C
Storage temperature	Tstg	-55 to +125	°C

■ Selection guide

V97xxxxB-x

Symbol		
a , b	Detection voltage	09: Vdetn=0.9V(N-ch) 24:Vdetn=2.4V(CMOS) 10: Vdetn=1.0V(N-ch) 30:Vdetn=3.0V(CMOS) 11: Vdetn=1.1V(N-ch) 45:Vdetn=4.5V(CMOS)
c	Output form	N: N-ch(N-ch opendrain) C: CMOS
d	Package	A: SOT-89 B: SOT-23
e	Product version	B
f	Taping direction	S: Refer to PKG file N: Refer to PKG file

V97 x x x x B - x
↑ ↑ ↑ ↑ ↑ ↑
a b c d e f

■ Pin configuration

SOT-89(TOP VIEW)

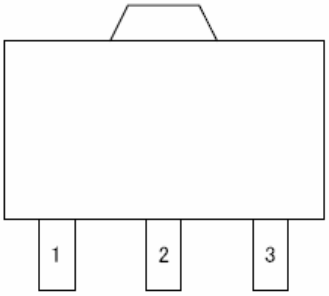

Pin No.	Pin name
1	OUT
2	VDD
3	VSS

SOT-23(TOP VIEW)

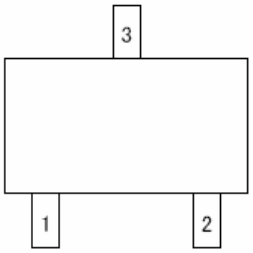

Pin No.	Pin name
1	OUT
2	VDD
3	VSS

■ Block diagram

N-ch Output

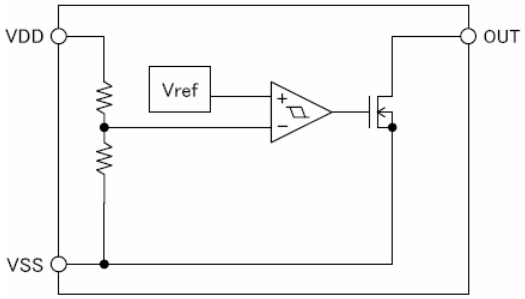

CMOS Output

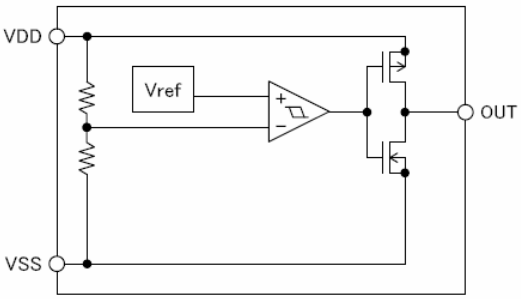

■ Timing chart

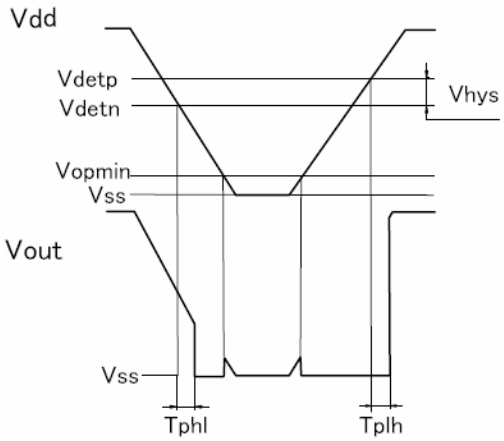

■ Electrical characteristics

Parameter	Symbol	Condition	Min.	Typ.	Max.	Unit
Detection voltage(N-ch)	Vdetn	V9709N×B	0.878	0.900	0.922	V
		V9710N×B	0.975	1.000	1.025	
		V9711N×B	1.073	1.100	1.127	
Detection voltage(CMOS)	Vdetn	V9727C×B	2.633	2.700	2.767	
		V9730C×B	2.925	3.000	3.075	
		V9740C×B	3.900	4.000	4.100	
Hysteresis width	Vhys		Vdetn ×0.02		Vdetn ×0.02	V
Current consumption	Iss	N-ch : Vdd=1.5V		1.0	3.0	μA
		V9727C×B:Vdd=4.5V V9730C×B:Vdd=4.5V V9740C×B:Vdd=4.5V		1.5	4.5	
Power voltage	Vdd		0.8		6.0	V
Output current(N-ch)	Ioutn	Vdd=0.8V,Vds=0.5V	0.002	0.100		mA
Output current	Ioutn	Vdd=1.5V,Vds=0.5V	1.0	2.0		
	Ioutn	Vdd=4.5V,Vds=2.1V	0.5	1.5		
Delay time(N-ch)	Tphl			2.0		ms
Delay time(CMOS)	Tphl			0.1		
Temperature characteristic of Vdetn	$\frac{\Delta Vdetn}{\Delta Top}$	V9709N×B:Top=-40°C to +85°C		-0.27		mV/°C
		V9710N×B:Top=-40°C to +85°C		-0.30		
		V9711N×B:Top=-40°C to +85°C		-0.33		
		V9727C×B:Top=-40°C to +85°C		-0.27		
		V9730C×B:Top=-40°C to +85°C		-0.30		
		V9740C×B:Top=-40°C to +85°C		-0.40		

■ General description

V88xxxxA is high current and low dropout(LOD) CMOS fixed voltage regulator. There are 2 types of CE selection for V88 series: non-chip enable function and "H"active. Thermal shutdown protective function and short circuit current limiter are included in the IC. The standard output voltages are 1.2V, 1.8.V, 2.5V, 3.0V, 3.3V,5.0V; V88 series can also be designed as semi-custom IC within the range of 0.8V to 5.0V by 0.1V step.

■ Features

- Output voltage range : 0.8V to 5.0V (by 0.1V)
- Output current : 300mA
- Stand by current consumption : Typ.0.1μA
- Input stability : Typ.0.02%/V(Iout=40mA)
- Load stability : Typ.5mV(1mA≤Iout≤100mA)
- Accuracy of output voltage : ±2.0%(Vout>1.5V), ±30mV(Vout≤1.5V)
- Input-output voltage difference : Typ.350mV(Vout=3.0V, Iout=300mA)
- Short circuit current limiter : Typ.40mA(Vout=0V)
- Thermal shutdown protection : Typ.165°C
- Chip enable pin : "H"active(V88xx3xA)
- Package : SOT-89, SOT-89-5,SOT-23
  SOT-25,SC-70(SOT-323),SC-70-5

■ Application

- Battery operated devices
- Camera and Video recorders
- Reference voltage source
- Portable electronics

■ Maximum absolute ratings

Parameter	Symbol	Limit	Unit
Input voltage	Vin	Vss-0.3 to 7.0	V
CE Input voltage	Vce	Vss-0.3 to Vin+0.3	V
Output voltage	Vout	Vss-0.3 to Vin+0.3	V
Output current	Iout	600	mA
Power dissipation	Pd	500 (SOT-89-5)	mW
		300 (SOT-89),(SOT-25)	
		200 (SOT-23)	
		150 (SC-70),(SC-70-5)	
Operationg Temperature	Top	-40 to +85	°C
Storage Temperature	Tstg	-55 to +125	°C

■ Selection guide

V88xxxxA-x

Symbol		
a , b	Output voltage	e.g. : 12: Vout=1.2V 18: Vout=1.8V 25: Vout=2.5V 30: Vout=3.0V 33: Vout=3.3V 50: Vout=5.0V
c	CE selection	1:No CE 3:CE="H"active
d	Package	A: SOT-89, SOT-89-5 B: SOT-23, SOT-25 C: SC-70(SOT-232),SC-70-5
e	Product version	A
f	Taping direction	S,N: Ref. P114, P115, P117

V88 x x x x A - x
↑↑↑↑↑ ↑
a b c d e f

■ Pin configuration

SOT-89(TOP VIEW)

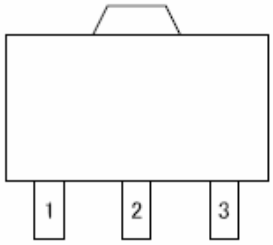

V88x1AA

Pin No.	Pin name
1	VSS
2	VIN
3	VOUT

SOT-89-5(TOP VIEW)

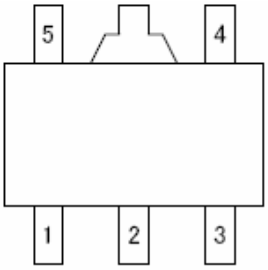

V88xx3AA

Pin No.	Pin name
1	VSS
2	VIN
3	VOUT
4	NC
5	CE

SOT-23(TOP VIEW)

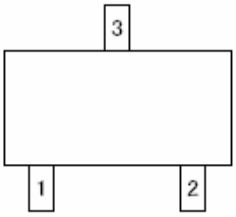

V88xx1BA

Pin No.	Pin name
1	VSS
2	VOUT
3	VIN

SOT-25(TOP VIEW)

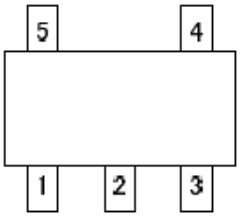

V88xx3BA

Pin No.	Pin name
1	VSS
2	VIN
3	VOUT
4	NC
5	CE

SC-70(TOP VIEW)

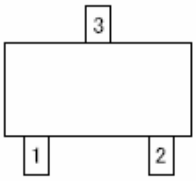

V88xx1CA

Pin No.	Pin name
1	VSS
2	VOUT
3	VIN

SC-70-5(TOP VIEW)

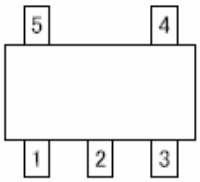

V88xx3CA

Pin No.	Pin name
1	VSS
2	VIN
3	VOUT
4	NC
5	CE

■ Standard circuit

V88xx1xA

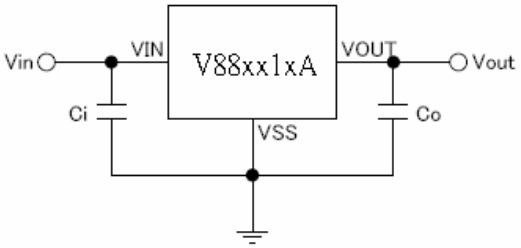

∗ Ci=1μF, Co=1μF or greater

V88xx3xA

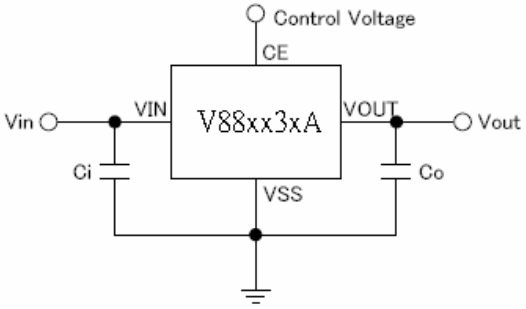

∗ Ci=1μF, Co=1μF or greater

■ Block diagram

V88xx1xA

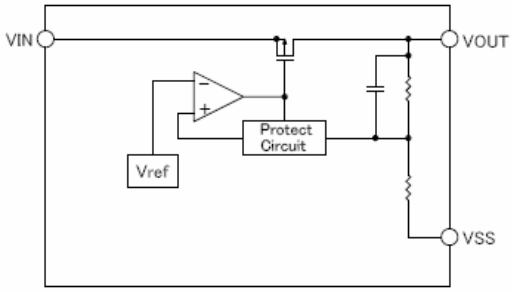

V88xx1xA

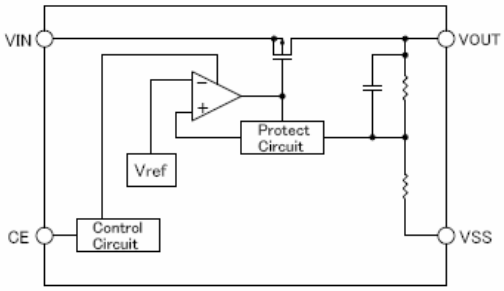

■ Electrical characteristics(V88xx1xA : No CE pin)

Top=25°C

Parameter	Symbol	Condition	Min.	Typ.	Max.	Unit
Output voltage	Vout	Vout=1.2V : Vin=2.2V, Iout=40mA	1.170	1.200	1.230	V
		Vout=1.8V : Vin=2.8V, Iout=40mA	1.764	1.800	1.836	
		Vout=2.5V : Vin=3.5V, Iout=40mA	2.450	2.500	2.550	
		Vout=3.0V : Vin=4.0V, Iout=40mA	2.940	3.000	3.060	
		Vout=3.3V : Vin=4.3V, Iout=40mA	3.234	3.300	3.366	
		Vout=5.0V : Vin=6.0V, Iout=40mA	4.900	5.000	5.100	
Output current	Iout	Vin=Vout+1.0V	300			mA
Input stability	$\frac{\Delta Vout}{\Delta Vin}$	Vout=1.2V : 1.7V≤Vin≤6.0V, Iout=40mA		0.05	0.20	%/V
		Vout=1.8V : 2.3V≤Vin≤6.0V, Iout=40mA		0.02	0.20	
		Vout=2.5V : 3.0V≤Vin≤6.0V, Iout=40mA		0.02	0.20	
		Vout=3.0V : 3.5V≤Vin≤6.0V, Iout=40mA		0.02	0.20	
		Vout=3.3V : 3.8V≤Vin≤6.0V, Iout=40mA		0.02	0.20	
		Vout=5.0V : 5.5V≤Vin≤6.0V, Iout=40mA		0.02	0.20	
Load stability	$\frac{\Delta Vout}{\Delta Iout}$	Vin=Vout+1.0V, 1mA≤Iout≤100mA		5	20	mV
Input-Output voltage differential	Vdif	Vout=1.2V : Iout=100mA		380	620	mV
		Vout=1.8V : Iout=100mA		145	230	
		Vout=2.5V : Iout=100mA		120	190	
		Vout=3.0V : Iout=100mA		110	175	
		Vout=3.3V : Iout=100mA		110	175	
		Vout=5.0V : Iout=100mA		100	160	
Current consumption	Iss	Vin=Vout+1.0V, N-load		15	50	μA
Input voltage	Vin		1.4		6.0	V
Output voltage temperature coefficientIout	$\frac{\Delta Vout}{\Delta Top}$	-40°C≤Top≤+85°C: Vin=Vout+1.0V, Iout=40mA		±100		ppm/°C
Short circuit current	Ilim	Vout=0V		40		mA
Ripple rejection ratio	RR	f=1kHz, Iout=40mA		60		dB
Thermal shutdown temparature	Tsd			165		°C
Output noise	Vno	BW=10Hz to 100kHz		30		μVrms

■ Electrical characteristics(V88xx3xA : CE = "H"activ)

Top=25°C

Parameter	Symbol	Condition	Min.	Typ.	Max.	Unit
Output voltage	Vout	Vout=1.2V : Vin=2.2V, Iout=40mA	1.170	1.200	1.230	V
		Vout=1.8V : Vin=2.8V, Iout=40mA	1.764	1.800	1.836	
		Vout=2.5V : Vin=3.5V, Iout=40mA	2.450	2.500	2.550	
		Vout=3.0V : Vin=4.0V, Iout=40mA	2.940	3.000	3.060	
		Vout=3.3V : Vin=4.3V, Iout=40mA	3.234	3.300	3.366	
		Vout=5.0V : Vin=6.0V, Iout=40mA	4.900	5.000	5.100	
Output current	Iout	Vin=Vout+1.0V	300			mA
Input stability	$\frac{\Delta Vout}{\Delta Vin}$	Vout=1.2V : 1.7V≤Vin≤6.0V, Iout=40mA		0.05	0.20	%/V
		Vout=1.8V : 2.3V≤Vin≤6.0V, Iout=40mA		0.02	0.20	
		Vout=2.5V : 3.0V≤Vin≤6.0V, Iout=40mA		0.02	0.20	
		Vout=3.0V : 3.5V≤Vin≤6.0V, Iout=40mA		0.02	0.20	
		Vout=3.3V : 3.8V≤Vin≤6.0V, Iout=40mA		0.02	0.20	
		Vout=5.0V : 5.5V≤Vin≤6.0V, Iout=40mA		0.02	0.20	
Load stability	$\frac{\Delta Vout}{\Delta Iout}$	Vin=Vout+1.0V, 1mA≤Iout≤100mA		5	20	mV
Input-Output voltage differential	Vdif	Vout=1.2V : Iout=100mA		380	620	mV
		Vout=1.8V : Iout=100mA		145	230	
		Vout=2.5V : Iout=100mA		120	190	
		Vout=3.0V : Iout=100mA		110	175	
		Vout=3.3V : Iout=100mA		110	175	
		Vout=5.0V : Iout=100mA		100	160	
Current consumption	Iss	Vin=Vout+1.0V, No-load		15	50	μA
Stand-by current consumption	Istandby	Vin=Vout+1.0V, Vce=0			0.5	μA
Input voltage	Vin		1.4		6.0	V
CE input voltage High	Vceh	Vin=6.0V	1.8		Vin	V
CE input voltage Low	Vce1	Vin=1.4V	0.0		0.2	V
CE input current High	Iceh	Vce=Vin=6.0V	-0.2	0.0	0.2	μA
CE input current Low	Ice1	Vce=Vss, Vin=6.0V	-0.2	0.0	0.2	
Output voltage temperature coefficientIout	$\frac{\Delta Vout}{\Delta Top}$	-40°C≤Top≤+85°C: Vin=Vout+1.0V, Iout=40mA		±100		ppm/°C
Short circuit current	Ilim	Vout=0V		40		mA
Ripple rejection ratio	RR	f=1kHz, Iout=40mA		60		dB
Thermal shutdown temparature	Tsd			165		°C
Output noise	Vno	BW=10Hz to 100kHz		30		μVrms

■ General description

V89xxxBA is CMOS LDO voltage regulator. There are 3 types of CE selection for V89 series: non-chip enable function and "L" active and "H" active. Thermal shutdown protective function and short circuit current limiter are included in the IC. The standard output voltages are 1.2V, 1.8.V, 2.5V, 3.0V, 3.3V,5.0V; V89 series can also be designed as semi-custom IC within the range of 0.8V to 5.0V by 0.1V step.

■ Features

- Output voltage range : 0.8V to 5.0V (by 0.1V)
- Output current : 300mA
- Stand by current consumption : Typ.0.1μA
- Input stability : Typ.0.02%/V(Iout=40mA)
- Load stability : Typ.5mV(1mA≤Iout≤100mA)
- Accuracy of output voltage : ±2.0%(Vout>1.5V), ±30mV(Vout≤1.5V)
- Input-output voltage difference : Typ.350mV(Vout=3.0V, Iout=300mA)
- Short circuit current limiter : Typ.40mA(Vout=0V)
- Thermal shutdown protection : Typ.165°C
- Chip enable pin : "L"active(V88xx2BA) "H"active(V88xx3BA)
- Package : SOT-23, SOT-25

■ Application

- Battery operated devices
- Wireless devices
- Cell phones
- Battery-operated devices
- PCs

■ Maximum absolute ratings

Parameter	Symbol	Limit	Unit
Input voltage	Vin	Vss-0.3 to 7.0	V
$\overline{CE}$ /CE Input voltage	Vce	Vss-0.3 to Vin+0.3	V
Output voltage	Vout	Vss-0.3 to Vin+0.3	V
Output current	Iout	600	mA
Power dissipation	Pd	200(SOT-23)	mW
		300(SOT-25)	
Operationg Temperature	Top	-40 to +85	°C
Storage Temperature	Tstg	-55 to +125	°C

■ Selection guide

V89xxxBC-x

Symbol		
a , b	Output voltage	e.g. : 12: Vout=1.2V 18: Vout=1.8V 25: Vout=2.5V 30: Vout=3.0V 33: Vout=3.3V 50: Vout=5.0V
c	CE selection	1:No CE 2. $\overline{CE}$ ="H"active 3:CE= "H"active
d	Package	B: SOT-23, SOT-25
e	Product version	C
f	Taping direction	S,N: Ref. P114

V89 x x x BC - x
↑↑↑↑↑ ↑
a b c d e f

■ Pin configuration

SOT-23(TOP VIEW)

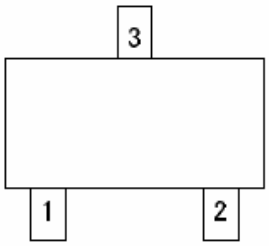

V89xx1BC

Pin No.	Pin name
1	VIN
2	VOUT
3	VSS

SOT-25(TOP VIEW)

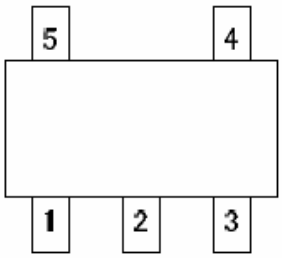

V89xx2BC

Pin No.	Pin name
1	VIN
2	VSS
3	$\overline{CE}$
4	NC
5	VOUT

SOT-25(TOP VIEW)

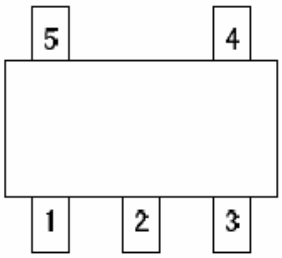

V89xx3BC

Pin No.	Pin name
1	VIN
2	VSS
3	CE
4	NC
5	VOUT

■ Standard circuit

V89xx1BC

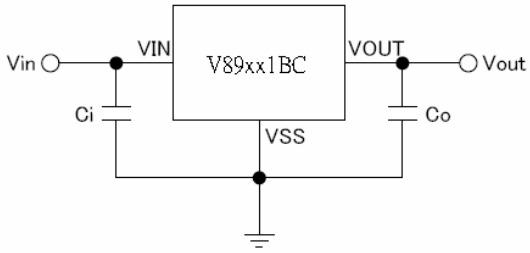

∗ Ci=1μF, Co=1μF or greater

V89xx2BC: $\overline{CE}$, V89xx3BC;CE

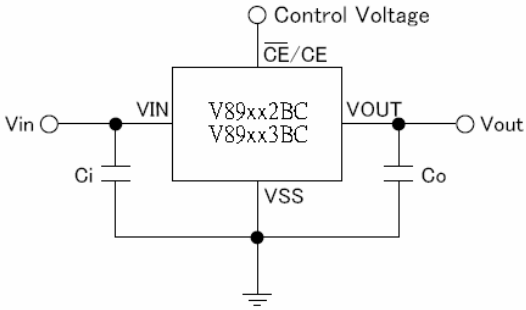

∗ Ci=1μF, Co=1μF or greater

■ Block diagram

V89xx1BC

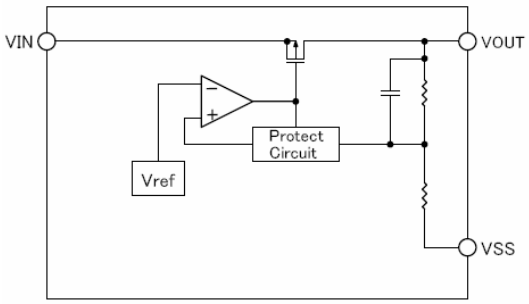

V89xx2BC: $\overline{CE}$, V89xx3BC;CE

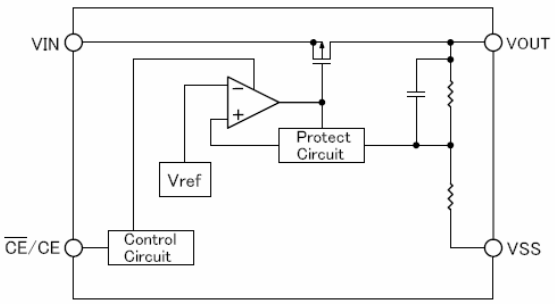

■ Electrical characteristics(V89xx1BC : No CE pin)

TOP=25°C

Parameter	Symbol	Condition	Min.	Typ.	Max.	Unit
Output voltage	Vout	Vout=1.2V : Vin=2.2V, Iout=40mA	1.170	1.200	1.230	V
		Vout=1.8V : Vin=2.8V, Iout=40mA	1.764	1.800	1.836	
		Vout=2.5V : Vin=3.5V, Iout=40mA	2.450	2.500	2.550	
		Vout=3.0V : Vin=4.0V, Iout=40mA	2.940	3.000	3.060	
		Vout=3.3V : Vin=4.3V, Iout=40mA	3.234	3.300	3.366	
		Vout=5.0V : Vin=6.0V, Iout=40mA	4.900	5.000	5.100	
Output current	Iout	Vin=Vout+1.0V	300			mA
Input stability	$\frac{\Delta Vout}{\Delta Vin}$	Vout=1.2V : 1.7V≤Vin≤6.0V, Iout=40mA		0.05	0.20	%/V
		Vout=1.8V : 2.3V≤Vin≤6.0V, Iout=40mA		0.02	0.20	
		Vout=2.5V : 3.0V≤Vin≤6.0V, Iout=40mA		0.02	0.20	
		Vout=3.0V : 3.5V≤Vin≤6.0V, Iout=40mA		0.02	0.20	
		Vout=3.3V : 3.8V≤Vin≤6.0V, Iout=40mA		0.02	0.20	
		Vout=5.0V : 5.5V≤Vin≤6.0V, Iout=40mA		0.02	0.20	
Load stability	$\frac{\Delta Vout}{\Delta Iout}$	Vin=Vout+1.0V, 1mA≤Iout≤100mA		5	20	mV
Input-Output voltage differential	Vdif	Vout=1.2V : Iout=100mA		380	620	mV
		Vout=1.8V : Iout=100mA		145	230	
		Vout=2.5V : Iout=100mA		120	190	
		Vout=3.0V : Iout=100mA		110	175	
		Vout=3.3V : Iout=100mA		110	175	
		Vout=5.0V : Iout=100mA		100	160	
Current consumption	Iss	Vin=Vout+1.0V, N-load		15	50	μA
Input voltage	Vin		1.4		6.0	V
Output voltage temperature coefficientIout	$\frac{\Delta Vout}{\Delta Top}$	-40°C≤Top≤+85°C: Vin=Vout+1.0V, Iout=40mA		±100		ppm/°C
Short circuit current	Ilim	Vout=0V		40		mA
Ripple rejection ratio	RR	f=1kHz, Iout=40mA		60		dB
Thermal shutdown temparature	Tsd			165		°C
Output noise	Vno	BW=10Hz to 100kHz		30		μVrms

■ Electrical characteristics(V89xx2BC : $\overline{CE}$ ="L"active, V89xx3BC:CE="H"active)

TOP=25°C

Parameter	Symbol	Condition	Min.	Typ.	Max.	Unit
Output voltage	Vout	Vout=1.2V : Vin=2.2V, Iout=40mA	1.170	1.200	1.230	V
		Vout=1.8V : Vin=2.8V, Iout=40mA	1.764	1.800	1.836	
		Vout=2.5V : Vin=3.5V, Iout=40mA	2.450	2.500	2.550	
		Vout=3.0V : Vin=4.0V, Iout=40mA	2.940	3.000	3.060	
		Vout=3.3V : Vin=4.3V, Iout=40mA	3.234	3.300	3.366	
		Vout=5.0V : Vin=6.0V, Iout=40mA	4.900	5.000	5.100	
Output current	Iout	Vin=Vout+1.0V	300			mA
Input stability	$\frac{\Delta Vout}{\Delta Vin}$	Vout=1.2V : 1.7V≤Vin≤6.0V, Iout=40mA		0.05	0.20	%/V
		Vout=1.8V : 2.3V≤Vin≤6.0V, Iout=40mA		0.02	0.20	
		Vout=2.5V : 3.0V≤Vin≤6.0V, Iout=40mA		0.02	0.20	
		Vout=3.0V : 3.5V≤Vin≤6.0V, Iout=40mA		0.02	0.20	
		Vout=3.3V : 3.8V≤Vin≤6.0V, Iout=40mA		0.02	0.20	
		Vout=5.0V : 5.5V≤Vin≤6.0V, Iout=40mA		0.02	0.20	
Load stability	$\frac{\Delta Vout}{\Delta Iout}$	Vin=Vout+1.0V, 1mA≤Iout≤100mA		5	20	mV
Input-Output voltage differential	Vdif	Vout=1.2V : Iout=100mA		380	620	mV
		Vout=1.8V : Iout=100mA		145	230	
		Vout=2.5V : Iout=100mA		120	190	
		Vout=3.0V : Iout=100mA		110	175	
		Vout=3.3V : Iout=100mA		110	175	
		Vout=5.0V : Iout=100mA		100	160	
Current consumption	Iss	Vin=Vout+1.0V, No-load		15	50	μA
Stand-by current consumption (89xx2BC)	Istandby	Vin=Vce=2.8V			0.5	μA
Stand-by current consumption (89xx3BC)	Istandby	Vin=Vout+1.0V, Vce=0			0.5	μA
Input voltage	Vin		1.4		6.0	V
$\overline{CE}$/CE input voltage High	Vceh	Vin=6.0V	1.8		Vin	V
$\overline{CE}$/CE input voltage Low	Vce1	Vin=1.4V	0.0		0.2	V
$\overline{CE}$/CE input current High	Iceh	Vce=Vin=6.0V	-0.2	0.0	0.2	μA
$\overline{CE}$/CE input current Low	Ice1	Vce=Vss, Vin=6.0V	-0.2	0.0	0.2	
Output voltage temperature coefficientIout	$\frac{\Delta Vout}{\Delta Top}$	-40°C≤Top≤+85°C: Vin=Vout+1.0V, Iout=40mA		±100		ppm/°C
Short circuit current	Ilim	Vout=0V		40		mA
Ripple rejection ratio	RR	f=1kHz, Iout=40mA		60		dB
Thermal shutdown temparature	Tsd			165		°C
Output noise	Vno	BW=10Hz to 100kHz		30		μVrms

■ General description

V87xxxA is CMOS voltage regulator which is characterized with low current consumption and low dropout.V87 series provides high output current of 300mA while the consumption current is comparatively low, which is Typ.1.0μA. The standard output voltages are 1.8V, 2.5V, 3.0V, 3.3V, 5.0V; V87 series can also be designed as a semi-custom IC within the range of 1.5V to 5.0V by 0.1V step. Thermal shutdown protection and short-circuit current limiter are included in the IC. Ceramic condenser with low ESR can be used as input and output ones.

■ Features

- Output voltage range : 1.5V to 5.0V (by 0.1V)
- Maximum output current : 200mA(1.5V to 3.9V)
  300mA(4.0V to 5.0V)
- Current consumption : Typ.1.0μA
- Input stability : Typ.0.05%/V
- Load stability : Typ.10mV(1mA≤Iout≤100mA)
- Accuracy of output voltage : ±2.0%
- Input-output voltage difference : Typ.125mV(Vout=3.0V, Iout=100mA)
- Short circuit current limiter : Typ.50mA(Vout=0V)
- Thermal shutdown protection : Typ.160°C
- Package : SOT-89, SOT-23, SC-70(SOT-323)

■ Application

- Cell phones
- Battery-operated devices
- Wireless devices
- Portable AV equipments

■ Maximum absolute ratings

Parameter	Symbol	Limit	Unit
Input voltage	Vin	Vss-0.3 to 7.0	V
Output voltage	Vout	Vss-0.3 to Vin+0.3	V
Output current	Iout	600	mA
Power dissipation	Pd	200(SOT-23)	mW
		300(SOT-25)	
Operationg temperature	Top	-40 to +85	°C
Storage temperature	Tstg	-55 to +125	°C

■ Selection guide

V87xxxA-x

Symbol		
a , b	Output voltage	e.g. : 18: Vout=1.8V 25: Vout=2.5V 30: Vout=3.0V 33: Vout=3.3V 50: Vout=5.0V
c	Package	A: SOT-89 B: SOT-23 C: SC-70(SOT-323)
d	Product version	A
e	Taping direction	S,N: Ref. P115, P114, P116

V87 x x x A - x
↑ ↑ ↑ ↑ ↑
a b c d e

■ Pin configuration

SOT-89(TOP VIEW)

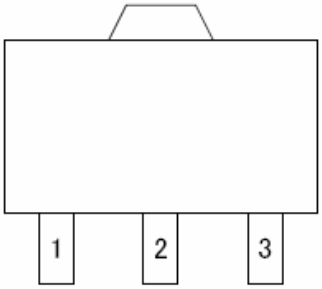

V87xxAA

Pin No.	Pin name
1	VSS
2	VIN
3	VOUT

SOT-23(TOP VIEW)

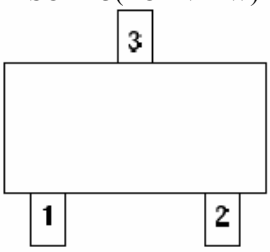

V87xxBA

Pin No.	Pin name
1	VSS
2	VOUT
3	VIN

SC-70 (TOP VIEW)

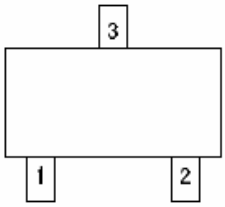

V87xxCA

Pin No.	Pin name
1	VSS
2	VOUT
3	VIN

■ Standard circuit

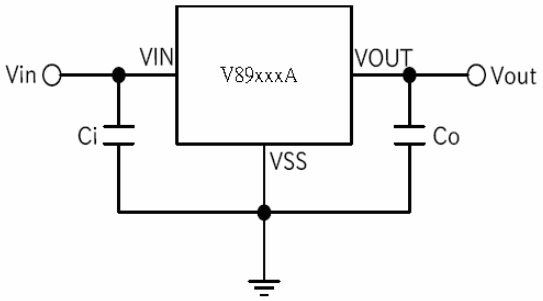

■ Block diagram

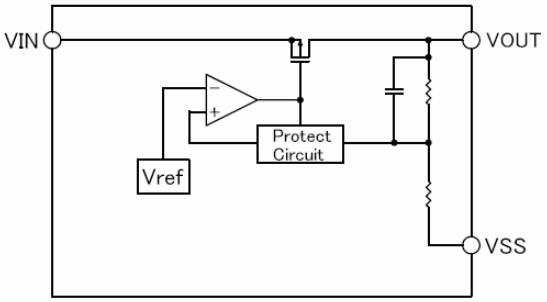

■ Electrical characteristics

TOP=25°C

Parameter	Symbol	Condition	Min.	Typ.	Max.	Unit
Output voltage	Vout	Vout=1.8V : Vin=2.8V, Iout=40mA	1.764	1.800	1.836	V
		Vout=2.5V : Vin=3.5V, Iout=40mA	2.450	2.500	2.550	
		Vout=3.0V : Vin=4.0V, Iout=40mA	2.940	3.000	3.060	
		Vout=3.3V : Vin=4.3V, Iout=40mA	3.234	3.300	3.366	
		Vout=5.0V : Vin=6.0V, Iout=40mA	4.900	5.000	5.100	
Output current	Iout	Vout=1.8V : Vin=2.8V	200			mA
		Vout=2.5V : Vin=3.5V	200			
		Vout=3.0V : Vin=4.0V	200			
		Vout=3.3V : Vin=4.3V	200			
		Vout=5.0V : Vin=6.0V	300			
Input stability	$\frac{\Delta Vout}{\Delta Vin}$	Iout=40mA : Vout=1.8V : 2.3V≤Vin≤6.0V Vout=2.5V : 3.0V≤Vin≤6.0V Vout=3.0V : 3.5V≤Vin≤6.0V Vout=3.3V : 3.8V≤Vin≤6.0V Vout=5.0V : 5.5V≤Vin≤6.0V		0.05	0.25	%/V
Load stability	$\frac{\Delta Vout}{\Delta Iout}$	1mA≤Iout≤100mA Vout=1.8V : Vin=2.8V Vout=2.5V : Vin=3.5V Vout=3.0V : Vin=4.0V Vout=3.3V : Vin=4.3V Vout=5.0V : Vin=6.0V		10	20	mV
Input-Output voltage differential	Vdif	Vout=1.8V : Iout=100mA		180	280	mV
		Vout=2.5V : Iout=100mA		150	220	
		Vout=3.0V : Iout=100mA		125	190	
		Vout=3.3V : Iout=100mA		125	190	
		Vout=5.0V : Iout=100mA		110	170	
Current consumption	Iss	Vout=1.8V : Vin=2.8V, No-load		1.0	3.0	μA
		Vout=2.5V : Vin=3.5V, No-load				
		Vout=3.0V : Vin=4.0V, No-load				
		Vout=3.3V : Vin=4.3V, No-load				
		Vout=5.0V : Vin=6.0V, No-load				
Input voltage	Vin		1.8		6.0	V
Short circuit current	Ilim	Vout=0V		50		mA
Thermal shutdown temparature	Tsd			160		°C

■ General description

V86xxxxBxA is dual CMOS Voltage Regulator which consists of 2 large current LDOs. With the chip enable function of each channel, it is possible to control on/off independently. This chip enable control is managed by positive logic. The standby current is designed to be Typ.0.1μA. V86 series is available only in SOT-26 PKG, while the output voltage is fixed within the range of 1.2 to 4.0V. The internal short protection function will limit output current when VOUT pin is in short condition; meanwhile, thermal protection circuit will shut off the output voltage and current when an unusual high chip temperature is detected.

■ Features

- Output voltage range : 1.2V to 4.0V (by 0.1V)
- Input-output voltage difference : Typ.120mV(Vout=3.0V, Iout=100mA)
- Standby current consumption : Typ.0.1μA
- Current consumption : Typ.25μA
- Input stability : Typ.0.02%/V(Iout=40mA)
- Load stability : Typ.5mV(1mA≤Iout≤100mA)
- Accuracy of output voltage : ±2.0%(Vout>1.5V),±30mV(Vout≤1.5V)
- Short circuit current limiter : Typ.40mA(Vout=0V)
- Thermal shutdown protection : Typ.165°C
- Package : SOT-26

■ Application

- Portable electronics
- Wireless devices
- Cell phones
- Battery-operated devices

■ Maximum absolute ratings

Parameter	Symbol	Limit	Unit
Input voltage	Vin	Vss-0.3 to 10.0	V
CE1,CE2 Input voltage	Vce	Vss-0.3 to Vin+0.3	V
Vout1,Vout2 voltage	Vout	Vss-0.3 to Vin+0.3	V
Output current Iout1+Iout2	Iout	800	mA
Power dissipation	Pd	300	mW
Thermal resistance junction to ambient	Rθja	400	°C/W
Operationg Temperature	Top	-40 to +85	°C
Storage Temperature	Tstg	-55 to +125	°C

■ Selection guide

V86xxxxBxA-S

Symbol		
a , b	Output voltage1(Vout1)	e.g. : 12: Vout=1.2V 18: Vout=1.8V 30: Vout=3.0V 33: Vout=3.3V
c , d	Output voltage2(Vout2)	e.g. : 12: Vout=1.2V 18: Vout=1.8V 30: Vout=3.0V 33: Vout=3.3V
e	Package	B: SOT-26
f	Pin configuration type	1: Type1 2: Type2
g	Product version	A
h	Taping direction	S: Ref.P114

V86 x x x x B x A - S
↑ ↑ ↑ ↑ ↑ ↑ ↑ ↑
a b c d e f g h

■ Pin configuration

SOT-26(TOP VIEW)

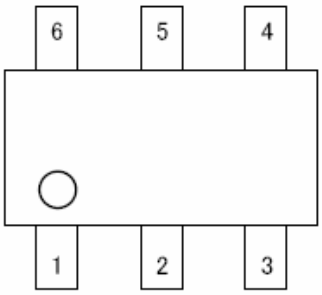

V86xxxxB1A

Pin No.	Pin name
1	VOUT2
2	VSS
3	CE2 *
4	CE1 *
5	VIN
6	VOUT1

V86xxxxB1A

Pin No.	Pin name
1	CE1 *
2	VIN
3	CE2 *
4	VOUT2
5	VSS
6	VOUT1

* CE1, CE2 : Active High

■ Standard circuit

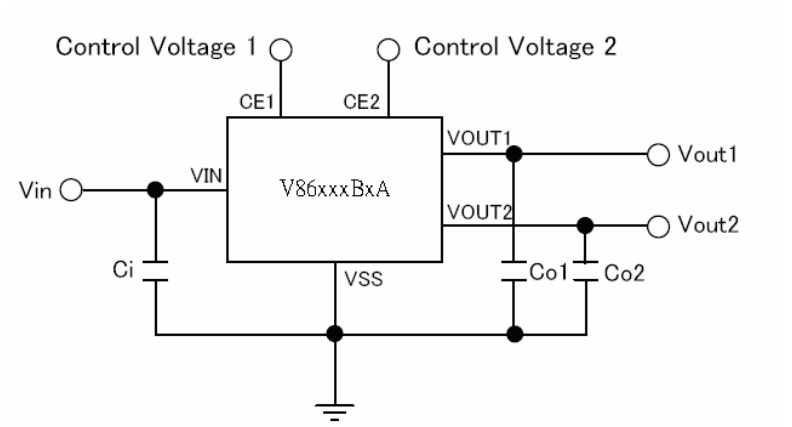

■ Block diagram

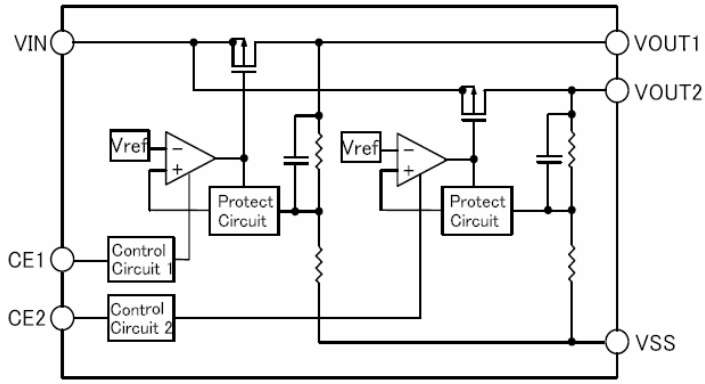

■ Electrical characteristics

TOP=25°C

Parameter	Symbol	Condition	Min.	Typ.	Max.	Unit
Output voltage	Vout	Vout1=Vout2=1.2V : Vin=2.2V,Iout=40mA	1.170	1.200	1.230	V
		Vout1=Vout2=1.8V : Vin=2.8V,Iout=40mA	1.764	1.800	1.836	
		Vout1=Vout2=3.0V : Vin=4.0V,Iout=40mA	2.940	3.000	3.060	
		Vout1=Vout2=3.3V : Vin=4.3V,Iout=40mA	3.234	3.300	3.366	
Output current	Iout	Vout1=Vout2=1.2V : Vin=2.2V	240			mA
		Vout1=Vout2=1.8V : Vin=2.8V	300			
		Vout1=Vout2=3.0V : Vin=4.0V	400			
		Vout1=Vout2=3.3V : Vin=4.3V	400			
Input stability	$\frac{\Delta Vout}{\Delta Vin}$	Iout=40mA : Vout1=Vout2=1.2V : 1.7V≤Vin≤6.0V Vout1=Vout2=1.8V : 2.3V≤Vin≤6.0V Vout1=Vout2=3.0V : 3.5V≤Vin≤6.0V Vout1=Vout2=3.3V : 3.8 V≤Vin≤6.0V		0.02	0.20	%/V
Load stability	$\frac{\Delta Vout}{\Delta Iout}$	1mA≤Iout≤100mA Vout1=Vout2=1.2V : Vin=2.2V Vout1=Vout2=1.8V : Vin=2.8V Vout1=Vout2=3.0V : Vin=4.0V Vout1=Vout2=3.3V : Vin=4.3V		5	20	mV
Input-Output voltage differential	Vdif	Vout1=Vout2=1.2V : Iout=100mA		380	620	mV
		Vout1=Vout2=1.8V : Iout=100mA		145	230	
		Vout1=Vout2=3.0V : Iout=100mA		110	175	
		Vout1=Vout2=3.3V : Iout=100mA		110	175	
Current consumption	Iss	Vin=Vce=Vout+1.0V, No-load		15	50	μA
Standby current consumption	Istandby	Vin=Vout+1.0V, Vce=0V		0.1	0.5	μA
Input voltage	Vin		1.4		6.0	V
CE input voltage High	Vceh	Vin=6.0V	1.80		Vin	V
CE input voltage Low	Vcel	Vin=1.4V	0.00		0.25	V
CE input current High	Iceh	Vin=Vce=Vout+1.0V	-0.50	0.05	0.50	μA
CE input current Low	Icel	Vin=Vout+1.0V, Vce=0V	-0.50	0.00	0.50	μA
Output voltage temperature coefficient	$\frac{\Delta Vout}{\Delta Top}$	-40°C≤Top≤+85°C, Iout=40mA, Vin=Vout+1.0V		±100		ppm/°C
Short circuit current	Ilim	Vout=0V		40		mA
Ripple rejection ratio	RR	F=1kHz, Iout=40mA		60		dB
Thermal shutdown temperature	Tsd			165		°C
Output noise	Vno	BW=10Hz to 100kHz		30		μVrms

* Electrical characteristics of both channels are identical while this table only represents those of one channel.

■ General description

V98xxxB is CMOS voltage regulator which mainly consists of reference voltage source, error amplifier, short-protected control transistor, output voltage setting resistors. The standard output voltage are 2.7V, 3.0V,3.3V, 5.0V; this output voltage is fixed internally with high accuracy. V98 series can also be made as semi-custom IC within the range of 1.2V to 6.0V by 0.1V step.

■ Features

- Output voltage range : 1.2V to 6.0V (by 0.1V)
- Low current consumption : Typ.4.0μA(V9830xB)
- Input stability : Typ.0.1%V(Iout=50mA)
- Load stability : Typ.10mV(1mA≤Iout≤50mA)
- Accuracy of output voltage : ±2.0%
- Output voltage temperature coefficient : ±100ppm/°C
- Package : SOT-89, SOT-23

■ Application

- Battery operated devices
- Digital cameras
- Video recorders
- Reference voltage source

■ Maximum absolute ratings

Parameter	Symbol	Limit	Unit
Input voltage	Vin	12	V
Output voltage	Vout	Vss-0.3 to Vin+0.3	V
Output current	Iout	200	mA
Power dissipation	Pd	200(SOT-89)	mW
		300(SOT-23)	
Operationg temperature	Top	-40 to +85	°C
Storage temperature	Tstg	-55 to +125	°C

*Output current must not exceed power dissipation specified in maximum absolute ratings.

■ Selection guide

V98xxxB-x

Symbol		
a , b	Output voltage	e.g. : 27: Vout=2.7V 30: Vout=3.0V 33: Vout=3.3V 50: Vout=5.0V
c	Package	A: SOT-89 B: SOT-23
d	Product version	B
e	Taping direction	S,N: Ref. P115, P114

V98 x x x B- x
↑↑↑↑ ↑
a b c d e

■ Pin configuration

SOT-26(TOP VIEW)

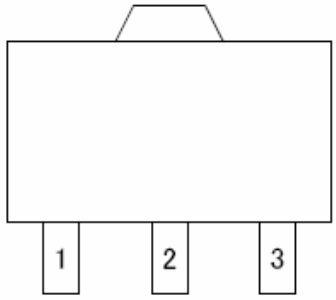

Pin No.	Pin name
1	VSS
2	VIN
3	VOUT

SOT-26(TOP VIEW)

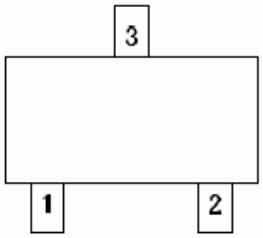

Pin No.	Pin name
1	VSS
2	VOUT
3	VIN

■ Standard circuit

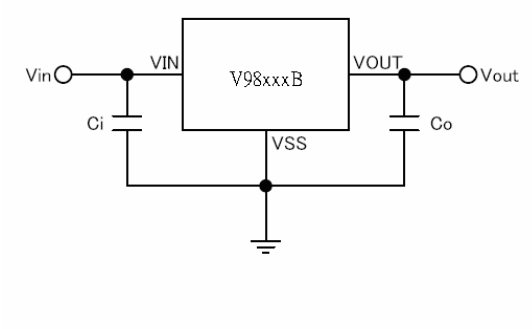

■ Block diagram

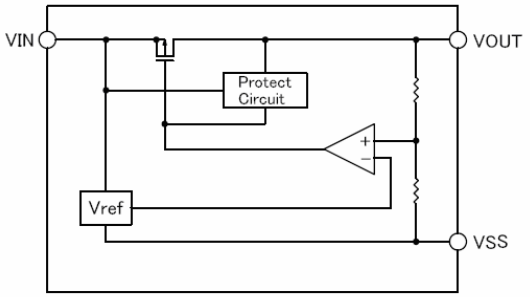

■ Electrical characteristics

TOP=25°C

Parameter	Symbol	Condition	Min.	Typ.	Max.	Unit
Output voltage	Vout	Vout =2.7V : Vin=4.7V, Iout=1mA	2.646	2.700	2.754	V
		Vout =3.0V : Vin=5.0V, Iout=1mA	2.940	3.000	3.060	
		Vout =3.3V : Vin=5.3V, Iout=1mA	3.234	3.300	3.366	
		Vout =5.0V : Vin=7.0V, Iout=1mA	4.900	5.000	5.100	
Output current	Iout	Vout =2.7V : Vin=3.3V	40			mA
		Vout =3.0V : Vin=3.6V	50			
		Vout =3.3V : Vin=3.9V	55			
		Vout =5.0V : Vin=5.6V	70			
Input stability	$\frac{\Delta Vout}{\Delta Vin}$	Vout=2.7V : 3.7V≤Vin≤6.7V, Iout=50mA Vout=3.0V : 4.0V≤Vin≤7.0V, Iout=50mA Vout=3.3V : 4.3V≤Vin≤7.3V, Iout=50mA Vout=5.0V : 6.0V≤Vin≤9.0V, Iout=50mA		0.100	0.275	%/V
Load stability	$\frac{\Delta Vout}{\Delta Iout}$	Vout=2.7V : Vin=4.7V, 1mA≤Iout≤50mA Vout=3.0V : Vin=5.0V, 1mA≤Iout≤50mA Vout=3.3V : Vin=5.3V, 1mA≤Iout≤50mA Vout=5.0V : Vin=7.0V, 1mA≤Iout≤50mA		10	20	mV
Input/output voltage differential	Vdif	Vout =2.7V : Iout=10mA		115	150	mV
		Vout =3.0V : Iout=10mA		105	145	
		Vout =3.3V : Iout=10mA		105	145	
		Vout =5.0V : Iout=10mA		72	110	
Current consumption	Iss	Vout =2.7V : Vin=4.7V, No-load	0.4	4.0	7.0	μA
		Vout =3.0V : Vin=5.0V, No-load	1.0	4.0	7.0	
		Vout =3.3V : Vin=5.3V, No-load	1.0	4.5	8.0	
		Vout =5.0V : Vin=7.0V, No-load	1.0	5.0	9.0	
Input voltage	Vin				10	V
Output voltage temperature coefficient	$\frac{\Delta Vout}{\Delta Top}$	-40°C≤Top≤+85°C Vin=Vout+2.0V, Iout=1mA		±100		ppm/°C

■ General description

V99xxxB is CMOS middle current voltage regulator which consists of reference voltage source, error amplifier, low resistance output transistor, short-circuit protection circuit, output voltage setting resistor and chip-enable circuit. V99 series is characterized with small input/output voltage difference (with its low resistance output transistor) and high load stability (with its high gain error amplifier). There are 3 types of CE selection of V99 series: non-chip enable function, "L"active and "H"active. The standard output voltages are 2.7V, 3.0V, 3.3V, 5.0V; V99 series can also be made as semi-custom IC within the range of 1.5V to 6.0V by 0.1V step.

■ Features

- Output voltage range : 1.5V to 6.0V (by 0.1V)
- Max.output current : 300mA(Internal current limiter operates when current exceeds 300mA)
- Stand-by Current consumption : Typ.0.1μA(V99xx3B)
- Input stability : Typ.0.15%/V(V9930xB, Iout=40mA)
- Load stability : Typ.5mV(1mA≤Iout≤100mA)
- Accuracy of output voltage : ±2.0%
- Input/Output voltage differential : Typ.140mV(Vout=3.0V, Iout=40mA)
- Short circuit current limiter : Typ.70mA(Vout=0V)Short circuit current limiter
- Chip enable pin : "L"active V99xx2BChip enable pin
  "H"active V99xx3B
- Package : SOT-89, SOT-89-5Package

■ Application

- Battery operated devices
- Digital cameras
- Video recorders
- Reference voltage source
- Cell phones

■ Maximum absolute ratings

Parameter	Symbol	Limit	Unit
Input voltage	Vin	12	V
$\overline{CE}$/CE Input voltage	Vce	Vss-0.3 to Vin+0.3	V
Output voltage	Vout	Vss-0.3 to Vin+0.3	V
Output current	Iout	500	mA
Power dissipation	Pd	300(SOT-89)	mW
		500(SOT-89-5)	
Operationg temperature	Top	-40 to +85	°C
Storage temperature	Tstg	-55 to +125	°C

*Output current must not exceed power dissipation specified in maximum absolute ratings.

■ Selection guide

V99xxxB-x

Symbol		
a , b	Output voltage	e.g. : 27: Vout=2.7V 30: Vout=3.0V 33: Vout=3.3V 50: Vout=5.0V
c	Package	1: No CE 2: $\overline{CE}$ ="L" active 3: CE="H" active
d	Product version	B
e	Taping direction	S: Ref. P115 N: Ref. P115

V99 x x x B- x
↑↑↑↑ ↑
a b c d e

■ Pin configuration

SOT-89(TOP VIEW)

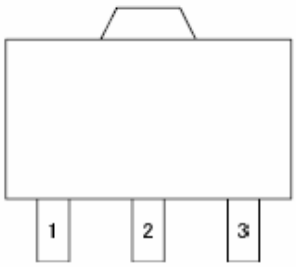

Pin No.	Pin name
1	VSS
2	VIN
3	VOUT

SOT-89-5(TOP VIEW)

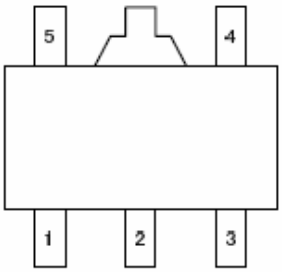

Pin No.	Pin name
1	VSS
2	VIN
3	VOUT
4	NC
5	$\overline{CE}$

SOT-89-5(TOP VIEW)

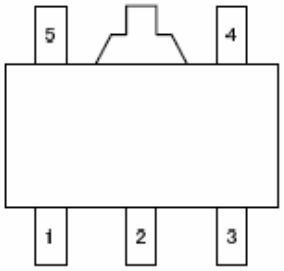

Pin No.	Pin name
1	VSS
2	VIN
3	VOUT
4	NC
5	CE

■ Standard circuit

V99xx1B

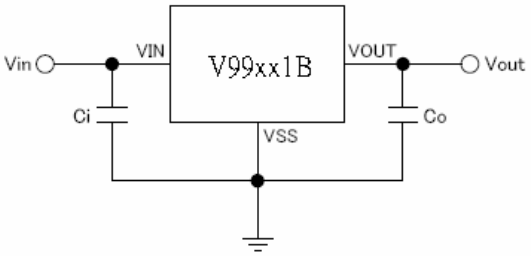

V99xx2B: $\overline{CE}$,V99xx3B:CE

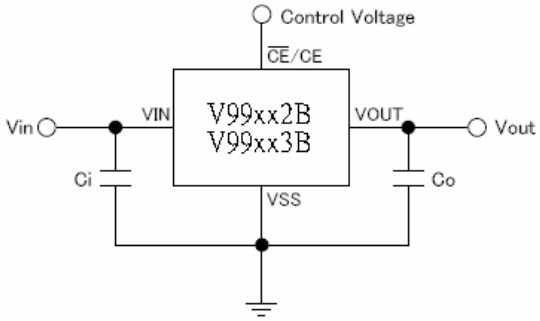

■ Block diagram

V99xx1B

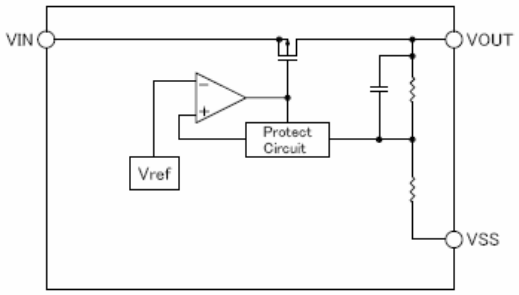

V99xx2B: $\overline{CE}$,V99xx3B:CE

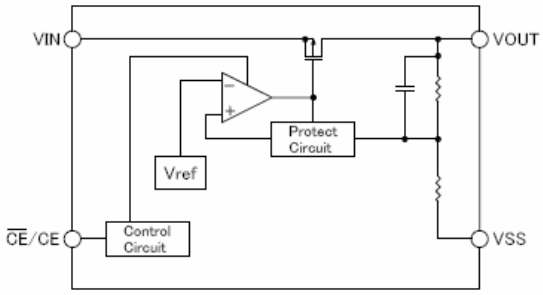

■ Electrical characteristics(V99xx1B : No CE pin)

TOP=25°C

Parameter	Symbol	Condition	Min.	Typ.	Max.	Unit
Output voltage	Vout	Vout =2.7V : Vin=3.7V, Iout=40mA	2.646	2.700	2.754	V
		Vout =3.0V : Vin=4.0V, Iout=40mA	2.940	3.000	3.060	
		Vout =3.3V : Vin=4.3V, Iout=40mA	3.234	3.300	3.366	
		Vout =5.0V : Vin=6.0V, Iout=40mA	4.900	5.000	5.100	
Output current (when Vout drops 0.1V from the original one)	Iout	Vout =2.7V : Vin=3.7V	150	260		mA
		Vout =3.0V : Vin=4.0V	160	290		
		Vout =3.3V : Vin=4.3V	170	300		
		Vout =5.0V : Vin=6.0V	200	330		
Input stability	$\frac{\Delta Vout}{\Delta Vin}$	Iout=40mA Vout=2.7V : 3.7V≤Vin≤8.0V Vout=3.0V : 4.0V≤Vin≤8.0V Vout=3.3V : 4.3V≤Vin≤8.0V Vout=5.0V : 6.0V≤Vin≤8.0V		0.15	0.30	%/V
Load stability	$\frac{\Delta Vout}{\Delta Iout}$	1mA≤Iout≤100mA Vout=2.7V : Vin=3.7V Vout=3.0V : Vin=4.0V Vout=3.3V : Vin=4.3V Vout=5.0V : Vin=6.0V		5	15	mV
Input/output voltage differential	Vdif	Vout =2.7V : Iout=40mA		190	320	mV
		Vout =3.0V : Iout=40mA		170	275	
		Vout =3.3V : Iout=40mA		150	265	
		Vout =5.0V : Iout=40mA		125	220	
Current consumption	Iss	Vout =2.7V : Vin=3.7V, No-load		25	45	μA
		Vout =3.0V : Vin=4.0V, No-load		25	45	
		Vout =3.3V : Vin=4.3V, No-load		25	45	
		Vout =5.0V : Vin=6.0V, No-load		30	55	
Input voltage	Vin				8	V
Output voltage temperature coefficient	$\frac{\Delta Vout}{\Delta Top}$	Vin=Vout+1.0V, Iout=40mA , -40°C≤Top≤+85°C		±100		ppm/°C
Short circuit current	Ilim	Vout=0V		70		mA

■ Electrical characteristics(V99xx2B : $\overline{CE}$ ="L" active), (V99xx3B : CE="H" active)

TOP=25°C

Parameter	Symbol	Condition	Min.	Typ.	Max.	Unit
Output voltage	Vout	Vout =2.7V : Vin=3.7V, Iout=40mA	2.646	2.700	2.754	V
		Vout =3.0V : Vin=4.0V, Iout=40mA	2.940	3.000	3.060	
		Vout =3.3V : Vin=4.3V, Iout=40mA	3.234	3.300	3.366	
		Vout =5.0V : Vin=6.0V, Iout=40mA	4.900	5.000	5.100	
Output current (when Vout drops 0.1V from the original one)	Iout	Vout =2.7V : Vin=3.7V	150	260		mA
		Vout =3.0V : Vin=4.0V	160	290		
		Vout =3.3V : Vin=4.3V	170	300		
		Vout =5.0V : Vin=6.0V	200	330		
Input stability	$\frac{\Delta Vout}{\Delta Vin}$	Iout=40mA Vout=2.7V : 3.7V≤Vin≤8.0V Vout=3.0V : 4.0V≤Vin≤8.0V Vout=3.3V : 4.3V≤Vin≤8.0V Vout=5.0V : 6.0V≤Vin≤8.0V		0.15	0.30	%/V
Load stability	$\frac{\Delta Vout}{\Delta Iout}$	1mA≤Iout≤100mA Vout=2.7V : Vin=3.7V Vout=3.0V : Vin=4.0V Vout=3.3V : Vin=4.3V Vout=5.0V : Vin=6.0V		5	15	mV
Input/output voltage differential	Vdif	Vout =2.7V : Iout=40mA		190	320	mV
		Vout =3.0V : Iout=40mA		170	275	
		Vout =3.3V : Iout=40mA		150	265	
		Vout =5.0V : Iout=40mA		125	220	
Current consumption	Iss	Vout =2.7V : Vin=3.7V		25	45	μA
		Vout =3.0V : Vin=4.0V		25	45	
		Vout =3.3V : Vin=4.3V		25	45	
		Vout =5.0V : Vin=6.0V		30	55	
Stand-by current consumption (V99xx2B)	Istandby	Vout =2.7V : Vin=Vce=3.7V Vout =3.0V : Vin=Vce =4.0V Vout =3.3V : Vin=Vce =4.3V Vout =5.0V : Vin=Vce =6.0V		0.005	0.100	μA
Stand-by current consumption (V99xx3B)	Istandby	Vout =2.7V : Vin=3.7V, Vce=Vss Vout =3.0V : Vin=4.0V, Vce=Vss Vout =3.3V : Vin=4.3V, Vce=Vss Vout =5.0V : Vin=6.0V, Vce=Vss			0.5	μA
Input voltage	Vin				8	V
$\overline{CE}$/CE Input voltage High	Vceh	Vin=8.0V : $\overline{CE}$ "L" active, CE "H" active	1.80		Vin	V
$\overline{CE}$/CE Input voltage Low	Vce1	Vin=2.0V : $\overline{CE}$ "L" active, CE "H" active	0.00		0.25	
$\overline{CE}$ Input current High	Iceh	Vce=Vin : $\overline{CE}$ "L"active		0.0	0.2	μA
$\overline{CE}$ Input current Low	Ice1	Vce=Vss : $\overline{CE}$ "L"active	-1.5	-0.4		
CE Input current High	Iceh	Vce=Vin : $\overline{CE}$ "H"active		0.4	1.5	
CE Input current Low	Iecl	Vce=Vss : $\overline{CE}$ "H"active	-0.2	0.0		
Output voltage temperature coefficient	$\frac{\Delta Vout}{\Delta Top}$	Vin=Vout+1.0V, Iout=40mA , -40°C≤Top≤+85°C		±100		ppm/°C
Short circuit current	Ilim	Vout=0V		70		mA

■ General description

V85xxxxA is CMOS voltage regulator which is characterized with high current and low dropout (55mV at Iout=100mA). There are 2 types of CE selection of V85 series: non-chip enable function and "H" active.The standard output voltages are 3.0V, 3.3V, 5.0V; meanwhile, maximun output current of V8533xGA can reach 1A. V85 series can also be made as semi-custom IC within the range of 0.8V to 5.0V by 0.1V step. This series also includes short circuit current limiter and thermal shutdown circuit. Ceramic capacitors with low ESR can be used as input and output ones.

■ Features

- Output voltage range : 0.8V to 5.0V (by 0.1V)
- Maximum output current : 800mA
- Current consumption : Typ.40μA
- Input stability : Typ.0.02%/V
- Load stability : Typ.20mV(1mA≤Iout≤300mA)
- Accuracy of output voltage : ±2.0%
- Input-output voltage difference : Typ.55mV(Vout=3.0V, Iout=100mA)
- Short circuit current limiter : Typ.70mA(Vout=0V)
- Package : SOT-223(0.8V to 5.0V)
  SOT-89(1.2V to 4.0V)
  SOT-89-5(1.2V to 4.0V)
  (0.8V to 1.1V, 4.1V to 5.0V are available in SOT-223 package only.)

■ Application

- Battery operated devices
- Portable AV equipments

■ Maximum absolute ratings

Parameter	Symbol	Limit	Unit
Input voltage	Vin	Vss-0.3 to 7.0	V
Output voltage	Vout	Vss-0.3 to Vin+0.3	V
Output current	Iout	1000	mA
Power dissipation	Pd	300(SOT-89)	mW
		500(SOT-89-5)	
		625(SOT-223)	
Thermal resistance junction toambient	Pθja	160(SOT-223)	°C/W
		200(SOT-89)	
		200(SOT-89-5)	
Operationg temperature	Top	-40 to +85	°C
Storage temperature	Tstg	-55 to +125	°C

■ Selection guide

V85xxxxA-x

Symbol		
a , b	Output voltage	e.g. : 30: Vout=3.0V 33: Vout=3.3V 50: Vout=5.0V
c	CE selection	1: No CE 2: CE="H" active
d	Package	H: SOT-223 A: SOT-89, SOT-89-5
e	Product version	A
f	Taping direction	S: Ref. P115 N: Ref. P115

V85 x x x x A- x
↑↑↑↑↑ ↑
a b c d e f

■ Pin configuration

SOT-223(TOP VIEW)

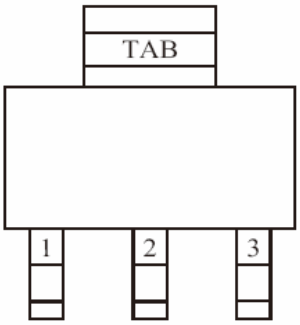

V85xx1HA

Pin No.	Pin name
1	VSS
2	VIN
3	VOUT

SOT-89(TOP VIEW)

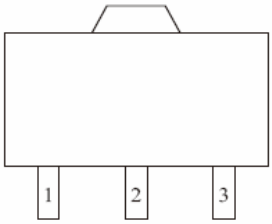

V85xx1HA

Pin No.	Pin name
1	VSS
2	VIN
3	VOUT

SOT-89-5(TOP VIEW)

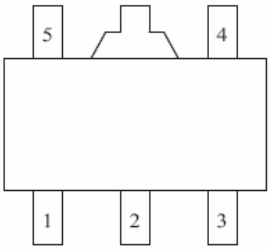

V85xx1HA

Pin No.	Pin name
1	VSS
2	VIN
3	VOUT
4	NC
5	CE

■ Standard circuit

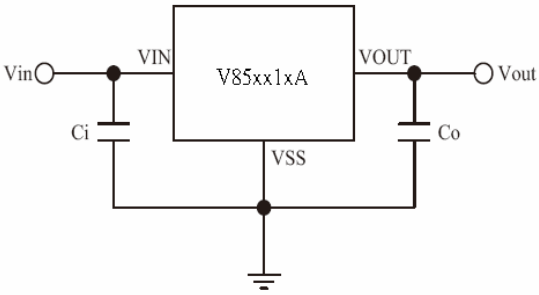

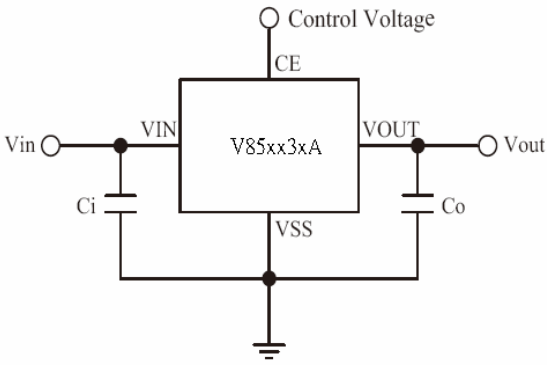

■ Block diagram

V85xx1xA

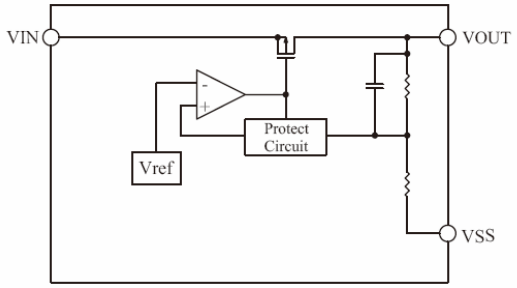

V99xx3AA

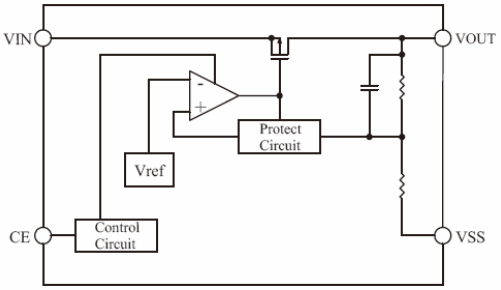

■ Electrical characteristics(V85xx1xA: No CE pin)

Ci=1.0μF, Co=4.7μF, TOP=25°C

Parameter	Symbol	Condition	Min.	Typ.	Max.	Unit
Output voltage	Vout	Vout =3.0V : Vin=4.0V, Iout=40mA	2.940	3.000	3.060	V
		Vout =3.3V : Vin=4.3V, Iout=40mA	3.234	3.300	3.366	
		Vout =5.0V : Vin=6.0V, Iout=40mA	4.900	5.000	5.100	
Output current	Iout	Vout =3.0V : Vin=4.0V	800			mA
		Vout =3.3V : Vin=4.3V				
		Vout =5.0V : Vin=6.0V				
Input stability	$\frac{\Delta Vout}{\Delta Vin}$	Vout=3.0V : 3.5V≤Vin≤6.0V, Iout=100mA		0.02	0.20	%/V
		Vout=3.3V : 3.8V≤Vin≤6.0V, Iout=100mA				
		Vout=5.0V : 5.5V≤Vin≤6.0V, Iout=100mA				
Load stability	$\frac{\Delta Vout}{\Delta Iout}$	Vout=3.0V : Vin=4.0V, 1mA≤Iout≤300mA		20	60	mV
		Vout=3.3V : Vin=4.3V, 1mA≤Iout≤300mA				
		Vout=5.0V : Vin=6.0V, 1mA≤Iout≤300mA				
Input-Output voltage differential	Vdif	Vout =3.0V : Iout=100mA		55	90	mV
		Vout =3.3V : Iout=100mA		55	90	
		Vout =5.0V : Iout=100mA		52	85	
Current consumption	Iss	Vout =3.0V : Vin=4.0V		40	100	μA
		Vout =3.3V : Vin=4.3V				
		Vout =5.0V : Vin=6.0V				
Input voltage	Vin		1.4		6.0	V
Output voltage temperature coefficient	$\frac{\Delta Vout}{\Delta Top}$	-40°C≤Top≤+85°C Vout=3.0V : Vin=4.0mA , Iout=40mA Vout=3.3V : Vin=4.3mA , Iout=40mA Vout=5.0V : Vin=6.0mA , Iout=40mA		±100		ppm/°C
Short circuit current	Ilim	Vout=0V		70		mA
Ripple rejection ratio	RR	f=1kHz, Iout=40mA		60		dB
Thermal shutdown temperature	Tsd			165		°C
Output noise	Vno	BW=10Hz to 100kHz		30		μVrms

■ Electrical characteristics(V85xx3AA: CE=”H” active)

Ci=1.0μF, Co=4.7μF, TOP=25°C

Parameter	Symbol	Condition	Min.	Typ.	Max.	Unit
Output voltage	Vout	Vout =3.0V : Vin=4.0V, Iout=40mA	2.940	3.000	3.060	V
		Vout =3.3V : Vin=4.3V, Iout=40mA	3.234	3.300	3.366	
Output current	Iout	Vout =3.0V : Vin=4.0V	800			mA
		Vout =3.3V : Vin=4.3V				
Input stability	$\frac{\Delta Vout}{\Delta Vin}$	Vout=3.0V : 3.5V≤Vin≤6.0V, Iout=100mA		0.02	0.20	%/V
		Vout=3.3V : 3.8V≤Vin≤6.0V, Iout=100mA				
Load stability	$\frac{\Delta Vout}{\Delta Iout}$	Vout=3.0V : Vin=4.0V, 1mA≤Iout≤300mA		20	60	mV
		Vout=3.3V : Vin=4.3V, 1mA≤Iout≤300mA				
Input-Output voltage differential	Vdif	Vout =3.0V : Iout=100mA		55	90	mV
		Vout =3.3V : Iout=100mA				
Current consumption	Iss	Vout =3.0V : Vin=4.0V		40	100	μA
		Vout =3.3V : Vin=4.3V				
Standby current consumption	Istandby	Vout=3.0V : Vin=4.0V, Vce=0V			0.5	μA
		Vout=3.3V : Vin=4.3V, Vce=0V				
Input voltage	Vin		1.4		6.0	V
CE input voltage High	Vceh	Vin=6.0V	1.8		Vin	V
CE input voltage Low	Vce1	Vin=1.4V	0.0		0.2	V
CE input current High	Iceh	Vce=Vin=6.0V	-0.2		0.2	μA
CE input current Low	Ice1	Vce=Vss, Vin=6.0V	-0.2		0.2	μA
Output voltage temperature coefficient	$\frac{\Delta Vout}{\Delta Top}$	-40°C≤Top≤+85°C Vout=3.0V : Vin=4.0mA , Iout=40mA Vout=3.3V : Vin=4.3mA , Iout=40mA		±100		ppm/°C
Short circuit current	Ilim	Vout=0V		70		mA
Ripple rejection ratio	RR	f=1kHz, Iout=40mA		60		dB
Thermal shutdown temperature	Tsd			165		°C
Output noise	Vno	BW=10Hz to 100kHz		30		μVrms

■ General description

V1117xG is bipolar LDO three terminal voltage regulator. This series includes thermal shutdown protection and short circuit current limiter. V1117 series is available in fixed version (V1117xG-xx Vout:1.8V, 2.5V, 3.3V, 5.0V) and adjustable version (V1117xG Vout:1.3V to 4.0V).

■ Features

- Output voltage range (fixed) : 1.8V, 2.5V, 3.3V, 5.0V
  (adj.) : 1.3V to 4.0V
- Line regulation : Typ.0.5%
- Load regulation : Typ.0.5%
- LDO voltage : 1.2V typical at up to 1.0A
- Package : SOT-223, TO-252-3

■ Application

- Linear regulator
- Battery chargers
- Microcontrollers

■ Maximum absolute ratings

Parameter	Symbol	Limit	Unit
Power supply voltage	Vcc	15	V
Power dissipation	Pd	Internally limited	W
Operating junction temperature	Top	0 to +125	°C
Storage temperature	Tstg	-40 to +150	°C
Thermal resistance junction to case	Rθjc	16	°C/W
Thermal resistance junction to ambient	Rθja	158 (SOT-223)	°C/W
		70 (TO-252-3)	
Lead temperature (soldering 10s.)	Tlead	260	°C

■ Selection guide

V1117xG-xx-S, V1117xG-S

Symbol		
a , b	Package	L: SOT-223 D: TO-252-3
c	Product version	H: SOT-223 A: SOT-89, SOT-89-5
d	Output voltage	e.g. : 18: Vout=1.8V 25: Vout=2.5V 33: Vout=3.3V 50: Vout=5.0V
e	Taping direction	S: Ref. P117, P118

• Fixed version

V1117 x G - x x - S
↑↑ ↑↑ ↑
a b c d e

• Adj. version

V1117 x G - S
↑↑ ↑
a b e

■ Pin configuration

SOT-223(TOP VIEW)

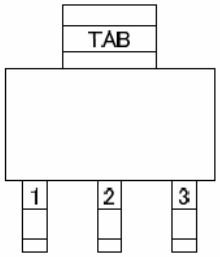

Pin No.	Pin name
1	ADJ/GND
2	VOUT
3	VIN

SOT-252-3(TOP VIEW)

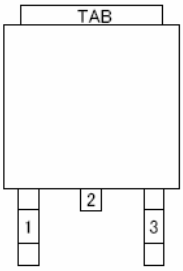

Pin No.	Pin name
1	ADJ/GND
2	VOUT
3	VIN

■ Typical application

Adjustable type : Vout=Vref (1+R2/R1) +Iadj×R2

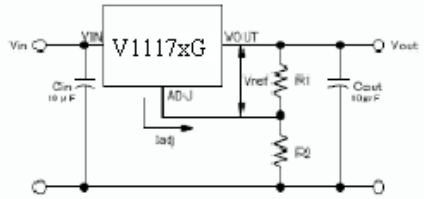

Fixed type : Vout=1.8V

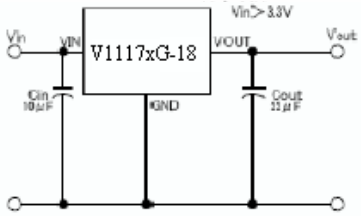

Fixed type : Vout=2.5V

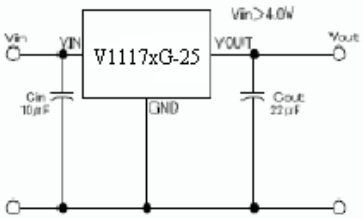

Fixed type : Vout=3.3V

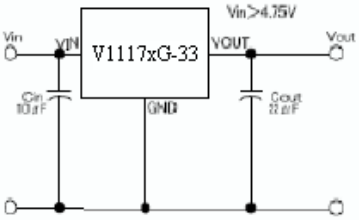

Fixed type : Vout=5.0V

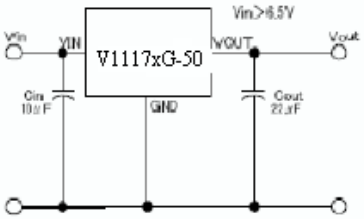

■ Electrical characteristics

TOP=25°C

Parameter	Symbol	Condition	Min.	Typ.	Max.	Unit
Output voltage	Vout	Adjustable : Iout=10mA, Vin=5.0V	0.98 Vout	Vout	1.02 Vout	V
		Vout=1.8V : Iout=10mA, Vin=5.0V	1.760	1.800	1.836	
		Vout=2.5V : Iout=10mA, Vin=5.0V	2.450	2.500	2.550	
		Vout=3.3V : Iout=10mA, Vin=5.0V	3.234	3.300	3.367	
		Vout=5.0V : Iout=10mA, Vin=5.0V	4.900	5.000	5.100	
Reference	Vref	Iout=10mA, Vin=5V(adjustable type only)	1.23	1.25	1.27	V
Line regulation	$\frac{\Delta Vout}{\Delta Vin}$	Adjustable : Iout=10mA, Vin=(Vout+1.5V)to 15V		0.5	2.0	%
		Vout=1.8V : Iout=10mA, Vin=3.3V to 15.0V		0.5	2.0	
		Vout=2.5V : Iout=10mA, Vin=4.0V to 15.0V		0.5	2.0	
		Vout=3.3V : Iout=10mA, Vin=4.8V to 15.0V		0.5	2.0	
		Vout=5.0V : Iout=10mA, Vin=6.5V to 15.0V		0.5	1.0	
Load regulation	$\frac{\Delta Vout}{\Delta Iout}$	Adjustable : Iout=10mA, Vin=(Vout+1.5V)to 15V		0.5	2.5	%
		Vout=1.8V : Iout=10mA, Vin=(Vout+1.5V)to 15V		0.5	2.0	
		Vout=2.5V : Iout=10mA, Vin=(Vout+1.5V)to 15V		0.5	2.0	
		Vout=3.3V : Iout=10mA, Vin=(Vout+1.5V)to 15V		0.5	2.0	
		Vout=5.0V : Iout=10mA, Vin=(Vout+1.5V)to 15V		0.5	1.0	
Dropout voltage	Vdif	Iout=1A, ΔVref=1%		1.20	1.45	V
Current limit	Ilim	Vin-Vout=2V	1.1	1.2		A
Quiescent current	Iq	(fixed type only)		5	10	mA
Min.load current	I1(min)	15V≤(Vin-Vout)≤5.75V (adjustable type only)		10		mA
Adjust Pin current	Iadj	(adjustable type only)		55	100	μA
RMS output noise	Vn			Vout× 0.003%		mV
Ripple rejection ratio	RR	f=120Hz, Vin=5V, Iout =1A, Cout=22μF	60	72		dB

■ General description

V1085DG is positive and bipolar LDO three terminal voltage regulator with 3A output current capability. This series includes thermal shutdown protection and short circuit current limiter. V1085 series is only available in adjustable version.

■ Features

- Output voltage range (adj.) : 1.27V to 5.55V
- Line regulation : Typ.0.5%
- Load regulation : Typ.0.5%
- LDO voltage : 1.3V typical at up to 3A
- Package : Package: TO-252

■ Application

- SCSI terminator
- Linear regulator
- Battery chargers
- Micro-controller

■ Maximum absolute ratings

Parameter	Symbol	Limit	Unit
Power supply voltage	Vcc	7	V
Power dissipation	Pd	Internally limited	W
Thermal resistance junction to case	Rθjc	5	°C/W
Thermal resistance junction to ambient	Rθja	70	°C/W
Operating junction temperature	Top	0 to +125	°C
Storage temperature	Tstg	-40 to +150	°C
Lead temperature (soldering 10s.)	Tlead	260	°C

■ Selection guide

V1085DG-S

Symbol		
a	Package	D: TO-252
b	Product version	G
c	Taping Package	S: Ref. P117

V1085 D G - S
↑ ↑ ↑
a b c

■ Pin configuration

SOT-252(TOP VIEW)

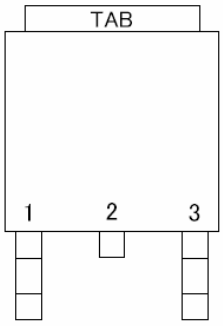

Pin No.	Pin name
1	ADJ/GND
2	VOUT
3	VIN

■ Typical application

Vout=Vref (1+R2/R1)+Iadj×R2

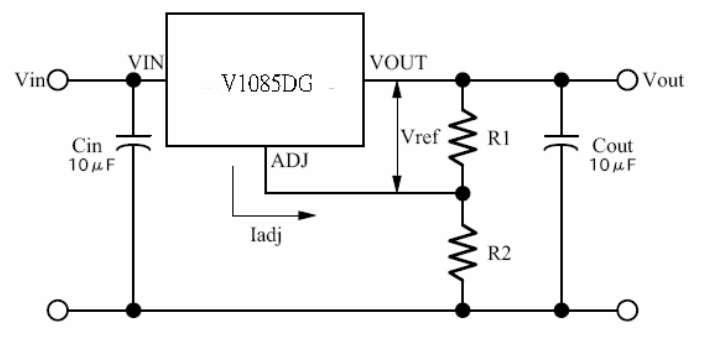

* Cin is required when device is for from filter capacitors.
* Cout is required for stability.
* V recommends using.10μF tantalum capacitor.

■ Electrical characteristics

TOP=25°C

Parameter	Symbol	Condition	Min.	Typ.	Max.	Unit
Reference	Vref	Iout=10mA, Vin=5V	1.23	1.25	1.27	V
Line regulation	ΔVout/ΔVin	Iout=10mA, Vin=(Vout+1.5V)to 7V		0.5	2.0	%
Load regulation	ΔVout/ΔIout	Iout=10mA to 3A, Vin-Vout=3V		0.5	2.5	%
Dropout voltage	Vdif	Iout=1A, ΔVref=1%		1.30	1.45	V
Current limit	Ilim	Vin-Vout=2V	4	5		A
Min.load current	I1(min)	15V≤(Vin-Vout)≤5.75V		10		mA
Adjust Pin current	Iadj			55	100	μA
RMS output noise	Vn			Vout× 0.003%		mV
Ripple rejection ratio	RR	f=120Hz, Vin=5V, Iout =1A, Cout=22μF	60	72		dB

■ General description

V78L05 is three-terminal positive-voltage regulator which consists of internal short circuit current limiting and internal thermal overload protection.

■ Features

- Maximum output current : 100mA
- No external component
- Output voltage : 5V
- Package : SOT-89

■ Application

- Linear regulator
- Switch power supply
- PCs

■ Maximum absolute ratings

Parameter	Symbol	Limit	Unit
Input voltage	Vin	30	V
Power dissipation (air temperature) *	Pd	500 (Top≤25°C)	mW
		300 (Top=70°C)	
Power dissipation (case temperature) *	Pd	3125 (Top≤25°C)	mW
Storage temperature	Tstg	-65 to +150	°C
Operating junction temperature	Top	0 to +125	°C
Lead temperature (soldering 10s.)	Tlead	260	°C

* To avoid exceeding the design maximum virtual junction temperature, maximum absolute ratingd should not be exceeded. Due to variations individual device electrical characteristics and thermal resistance, the built in thermal overload protection may be activated at power levels slightly above or below the rated dissipation.

■ Recommended operating conditions

Parameter	Symbol	Limit	Unit
Input voltage	Vin	7 to 20	V
Output current (Max.)	Iout	100	mA

■ Selection guide

V78L05CG-S

Symbol		
a , b	Output voltage	05: 5V
c , d	Package	CG: SOT-89
e	Taping Package	S: Ref. P115

V78L 0 5 CG - S
↑↑↑↑ ↑
a b c d e

* Taping direction is one way.

■ Pin configuration

SOT-89(TOP VIEW)

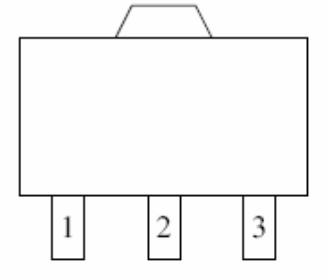

Pin No.	Pin name
1	VOUT
2	GND
3	VIN

■ Electrical characteristics (Vout=5.0V : V78L05CG)

If not specified, Vin=10V, Iout=40mA, Cin=0.33μF, Cout=0.1μF, 0°C<Tj<125°C

Parameter	Symbol	Condition	Min.	Typ.	Max.	Unit
Output voltage	Vout	Tj=25°	4.8	5.0	5.2	V
		Vin=7V to 20V, Iout=1mA to 40mA	4.75		5.25	
		Vin=10V, Iout=1mA to 70mA	4.75		5.25	
Line regulation	ΔVout/ΔVin	Tj=25°C, Iout=40mA, Vin=7V to 20V		55	150	mV
		Tj=25°C, Iout=40mA, Vin=8V to 20V		45	100	
Load regulation	ΔVout/ΔIout	Tj=25°C, Iout=1mA to 100mA		11	60	mV
		Tj=25°C, Iout=1mA to 40mA		5.0	30.0	
Input bias current	Ib	Tj=25°C		3.8	6.0	mA
		Tj=125°C			5.5	
Input bias current change	ΔIb	Vin=8V to 20V			1.5	mA
		Iout=1mA to 40mA			0.1	
Output noise voltage	Voutn	Ta=25°C, f=10Hz to 100kHz		40		μV
Ripple rejection	RR	Tj=25°C, f=120Hz, Vin=8V to 18V, Iout=40mA	41	49		dB
Dropout voltage	Vdif	Tj=25°C		1.7		v

■ Description

V901FxA is a high current LED driver with internal automatic mode switch pump circuit of pass-through mode (1x mode) and boost charge mode (2x mode) and constant current drive circuit; maximum output current of V901 series can reach 1A. V901 series is ideally suited for high luminosity white LED electrical applications which are powered by 1-cell lithium-ion/polymer battery. The required external parts of V901 series can be limited to the minimum of 3 capacitors and 3 programming resistors. With 4mm x 4mm & 3mm x 3mm QFN package, V901 series is possible to be assembled within limited space. The sink current, which can be switched to 3 different kinds by enable signal during operation,of LED pin is set by external programming resistors. For LED protection, it is possible to set high current lighting timer with external resistor; the light will be turned off forcibly by timer (3 options among 0.2 sec. to 1 sec.). Built-in soft-start circuitry makes V901 series be able to limit excessive power during start-up and switch of 1x & 2x mode.

■ Features

- Low voltage operation : 2.6V-4.4V
- Low power operation : 300μA(1x), 9mA(2x)
- Low standby current : Max.1μA
- Large output current : Max.1A
- LED protection : high current lightening timer
- Internal LED constant current circuit : external resistance program
- Soft-start : LED current start and switch of 1x & 2x mode
- Package : QFN16-4x4,QFN16-3x3(under development)
- Thermal shutdown function included

■ Application

- Camera light supply
- High luminosity LED flashlight

■ Maximum absolute ratings

Parameter	Symbol	Limit	Unit
VIN voltage	Vin	GND-0.3 to 6	V
VO voltage	Vo	GND-0.3 to 6	V
EN1,EN2 voltage	Ven	GND-0.3 to Vin+0.3	V
VO current, LED current	Io, Iled	1500 *	mA
Operating temperature	Top	-40 to +85	°C
Storage temperature	Tstg	-40 to +125	°C

* Based on long-term current denslty limitations. Assumes an operating duty cycle of ≤ 10% under absolute maximum conditions for durations less than 10 seconds. Max current for continuous operation is 600mA.

■ Selection guide

V901FxA-S

Symbol		
a	Package	F: QFN
b	Package type	A: QFN16-4x4 B: QFN16-3x3(under development)
c	Product version	A
d	Taping direction	S: Refer to PKG file

V901 F x A - S
↑ ↑ ↑ ↑
a b c d

■ Pin configuration

4×4 QFN(TOP VIEW)

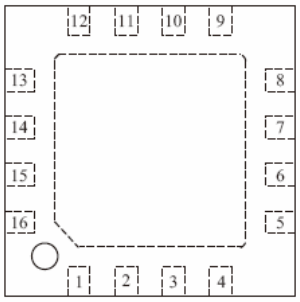

4×4 QFN(BOTTOM VIEW)

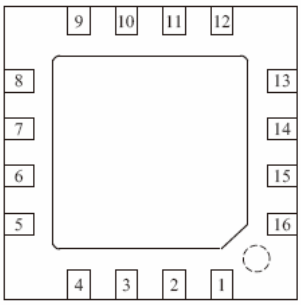

3×3 QFN(TOP VIEW)

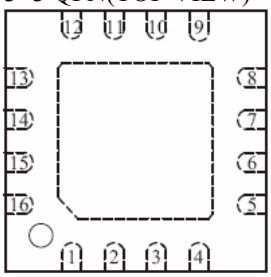

3×3 QFN(BOTTOM VIEW)

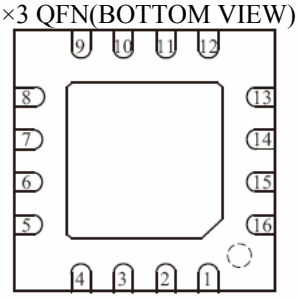

Pin No.	Pin name
1	ISET2
2	ISET1
3	EN2
4	EN1
5	AGND
6	FS
7	VIN
8	PGND1
9	CM
10	PVIN
11	CP
12	NC
13	VO
14	NC
15	PGND2
16	LED

■ Standard circuit

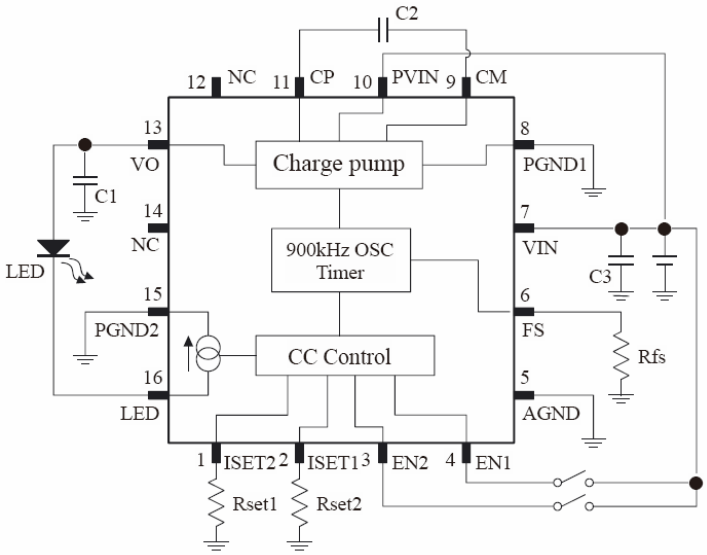

■ Block diagram

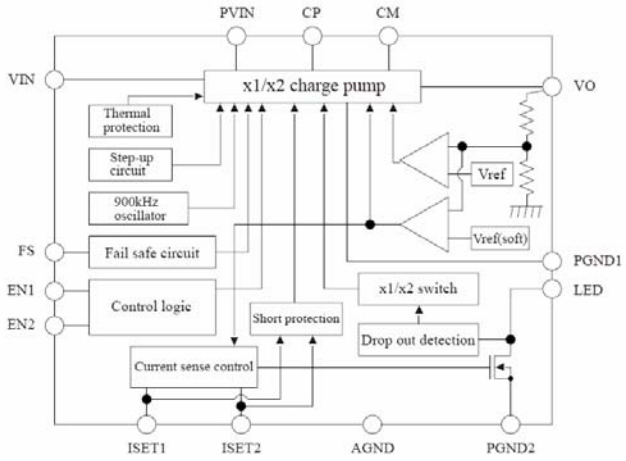

■ Electrical characteristics

When conditions are not mentioned specifically, Vin=3.6V, Cin=C1=2.2μF, Co=4.7μF, Ta=25°C

Parameter	Symbol	Condition	Min.	Typ.	Max.	Unit
Input voltage range	Vin		2.6		4.4	V
current consumption under still condition 1	Iqs1	1x mode, Iled=0mA		300	550	μA
current consumption under still condition 2	Iqs2	2x mode, Iled=0mA		9	16	mA
Standby current	Isd	EN1=EN2=0V		0.1	1.0	μA
Parameter	Symbol	Condition	Min.	Typ.	Max.	Unit
LED current ratio1 (Iled/Iset1/2)	Iled1	Vin=3.8V, Iled=200mA, Vf=3.3V	typ.× 0.96	3250	typ.× 1.04	mA/mA
LED current ratio2 (Iled/Iset1/2)	Iled2	Vin=3.3 to 4.4V, Iled=200 to 800mA	typ.× 0.90	3250	typ.× 1.10	mA/mA
Iled dropout voltage1	Vled1 (Min)	Mode switch threshold voltage, Iled=300mA		125	225	mV
Iled dropout voltage2	Vled2 (Min)	Mode switch threshold voltage, Iled=150mA	80	100	120	mV
Mode switch delay time1	Td1	EN1=High, EN2=Low	100	150	200	ms
Mode switch delay time2	Td2	EN1=Low or High, EN2=High	1	2	3	ms
LED current on time	LED(on)	since EN is ON until LED current starts	50	130	250	μs
Current capability	Iled (Max.)	Vin=3.3V, EN1=EN2=High, set Iled=1A, VF=4.6V	900			mA
LED current stablize time1	Tled1	Iled=0mA→200m		40		μs
LED current stablize time2	Tled2	Iled=200mA→700mA60μs		60		μs
LED current during soft step-up	Iled (soft)	Set Iled=700mA	250	350	450	mA

Parameter	Symbol	Condition	Min.	Typ.	Max.	Unit
Charge pump						
Soft step-up	Tsoft	Iled=700mA, Vo=3.7V→5.2V	75	150	300	μs
1x mode output voltage	Vo(x1)	Iled=0mA		Vin		V
2x mode output voltage	Vo(x2)	Iled=0mA	typ.× 0.96	5.5	typ.× 1.05	V
1x mode output impedance	Ro(x1)	Vin=3.4V		0.25	0.37	Ω
2x mode output impedance	Ro(x2)	(2Vin-Vo)/Io, Vin=3.2V, Vo=5.1V		1.70	2.55	Ω
Oscillation frequency	Fose		0.72	0.90	1.08	MHz
EN1, EN2						
Output on control voltage	Vc(ON)	Vin=2.9V to 4.4V, each pin	0.95			V
Output off control voltage	Vc(OFF)	Vin=2.9V to 4.4V, each pin			0.45	V
EN bias current	Ic(ON)	Vin=3.6V, each pin		20	50	μA
ISET1, ISET2						
Reference voltage	Vref	Iset=50μA, each pin	1.202	1.220	1.238	V
ISET set current	Iset	each pin			310	μA
Short protection circuit						
Iled limit when ISET is short	Iset (short)	ISET1&2 ture Iled to be OFF For short protection, Vin=3.9V, Vled=1.0, 2x operation		1.5		A
VO short protection detection volrage	Vo (short)	Iled is OFF when short protection circuit is activated	0.45	0.60	0.95	V
VO short current	Ishort	Vin=3.6V			310	mA
Thermal protection circuit						
Thermal protection circuit	OHP	Iled is OFF when thermal protection circuit is activated		150		°C
Fail safe circuit						
Fail safe set range	Tfs (range)	* Fail safe function is OFF when FS-VIN is short or open.	0.2		1.0	s
Fail safe time1	Tfs1		0.80	1.00	1.20	s
Fail safe time2	Tfs2		0.16	0.20	0.24	s
Fail safe time3	Tfs3		0.40	0.50	0.60	s
Fail safe circuit	Ifs		10	15	20	μA
FS threshold voltage1	Vfs1		0.120	0.150	0.180	V
FS threshold voltage2	Vfs2		0.405	0.450	0.495	V
FS threshold voltage3	Vfs3		1.080	1.220	1.360	V

Parameter			Condition
Charge pump			
EN logic	EN1	EN2	* EN1 & EN2 will be in standby mode when being pulled down to be open.
Standby (Output OFF)	0	0	
Low current	1	0	
High current	0	1	
Low+High current	1	1	

■ General description

V185xB is a bipolar type laser diode driver IC with internal APC circuit which consists of a reference voltage source, an error amplifier, and a thermal shutdown circuit for protection. With reference voltage source, the output of laser is comparatively stable during the change of power voltage and temperature. With its small package, V185xB is possible to be assembled within small areas on the board. When control loop damage occurs, V185xB is also capable of limiting the laser drive current; limited current value can be adjusted by an external resister on ILM. KLD output drive current can reach up to 400mA (max.). For avoidance of damage of laser diode, the Zener diode which is included in V185xB is able to absorb 8V surge between VCC-GND. V185xB is able to drive various types of laser diode modules (LDM); please refer to applicable laser diode modules for further information. V185xB can not only drive laser diode by APC control, but also by constant current with internal constant current setup function; therefore, V185xB can also be used as
constant current driver for laser diode, high luminous LED, etc.

■ Features

- Low voltage operation : 2.0V
- Low current consumption operation : Typ.1mA
- Laser drive current : Max.400mA
- Internal voltage reference : Typ.0.30V
- Thermal shutdown circuit : Typ.150°C
- Package : SOT-26
- Zener diode for surge absorption included

■ Application

- Driver for laser diode in laser pointer, laser level, etc.
- Driver for constant load current such as LED, etc.

■ Maximum absolute ratings

Parameter	Symbol	Limit	Unit
Operation voltage	VCC	GND-0.3 to 7.0	V
CMP voltage	Vcmp	GND-0.3 to 7.0	V
ILM voltage	Vilm	GND-0.3 to 7.0	V
KLD voltage	Vkld	GND-0.3 to 18.0	V
AMD voltage	Vamd	GND-0.3 to VCC+0.3	V
KLD current	Ikld	500	mA
Power dissipation	Pd	300	mW
Operation temperature	Top	-30 to +85	°C
Storage temperature	Tstg	-40 to +125	°C

■ Selection guide

V185BB-S

Symbol		
a	Package	B: SOT-26
b	Product version	B
c	Taping direction	S: Ref.P114

V185 B B - S
↑ ↑ ↑
a b c

■ Pin configuration

SOT-26(TOP VIEW)

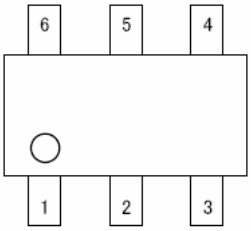

Pin No.	Pin name
1	AMD
2	GND
3	CMP
4	ILM
5	VCC
6	KLD

■ Block diagram

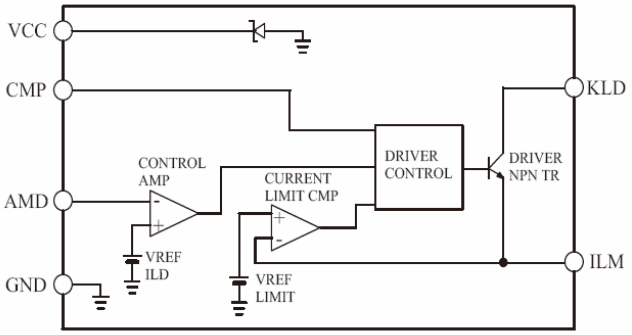

■ Electrical characteristics

Parameter	Symbol	Condition	Min.	Typ.	Max.	Unit
Operation voltage	VCC		2.0		6.5	V
Current consumption	ICC	VCC=3.6V		1	3	mA
AMDreference voltage	Vamd	VCC=3.6V	0.285	0.300	0.315	V
Vamd temperature characteristics	$\frac{\Delta Vamd}{\Delta Top}$	VCC=3.6V		±200		ppm/°C
KLD current	IDkld	VCC=2.7V, Vkld=1.0V	400			mA
KLD leak current	ILkld	VCC=5.5V			1.0	µA
ILM current limit voltage	Vilm	VCC=3.6V	0.13	0.15	0.17	V
Max. external clock frequency	Fext	VCC=3.6V			20	kHz
AMD input current	Iamd	VCC=5.5V, Vamd=1.0V	-0.5		0.5	µA
Zener diode avalanche voltage	ZDBV		6.8		8.0	V

■ Application circuit example (continuous drive circuit)

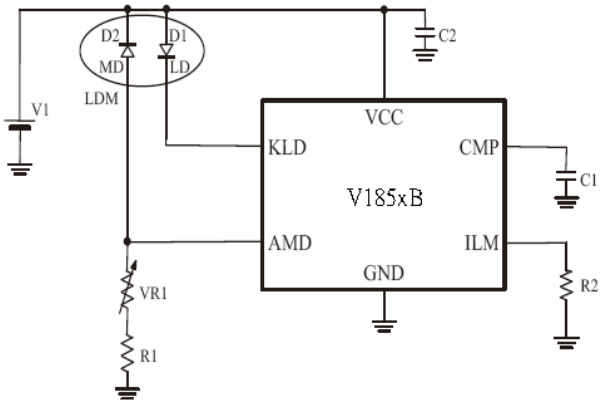

■ General description

V900x is CMOS white LED flashlight driver. This series can drive two series connected white LED by 1.5V to 3.0V input voltage. V900 series uses an external inductor as voltage booster and consists of an oscillator circuit and a driving transistor. The input DC power is transformed to constant current pulse when the external inductor is switched on and repeatly at the frequency : 35kHz, 55kHz.

■ Features

- Low noise : 35kHz, 55kHz (constant frequency switching)
- Constant average power control
- High efficiency
- Package : SOT-89

■ Application

- White LED flashlight
- Laser pointer
- LCD backlighting

■ Maximum absolute ratings

Parameter	Symbol	Limit	Unit
Max.voltage (Vdd to Vss)	Vdd	12	V
Max.voltage (LX to Vss)	Vlx	12	V
Max.current LX	Ilx	200	mA
Power dissipation	Pd	300	mW
Operating temperature	Top	-20 to +70	°C
Storage temperature	Tstg	-55 to +125	°C

■ Pin configuration

SOT-89(TOP VIEW)

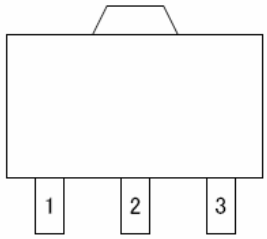

Pin No.	Pin name
1	VSS
2	VDD
3	LX

■ Block diagram

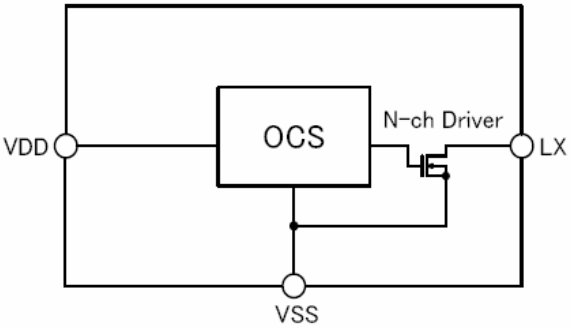

■ Application circuit

1cell 1LED

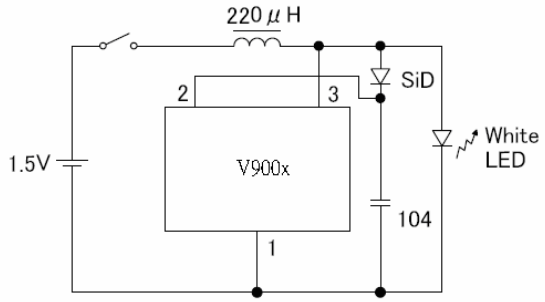

2cell 2LED

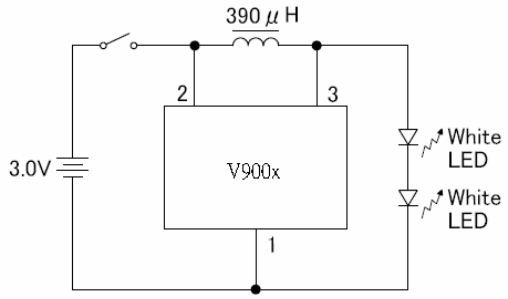

■ Electrical characteristics

Top=25°C

Parameter	Symbol	Condition	Min.	Typ.	Max.	Unit
Power voltage	Vdd		1.0		5.0	V
Current consumption	Iss	Vdd=3.0V		7.0	14.0	μA
Output current of LX pin	Ilx	Vdd=3.0V	90.0			mA
Leakage current of LX pin	Ilxl	Vdd=LX=6.0V			1.0	μA
Oscillation frequency : 35kHz	Fosc	Vdd=3.0V	22	35	55	kHz
Oscillation frequency : 55kHz			35	55	75	
Duty ratio : switching 35kHz	Duty	Vdd=3.0V	45	55	65	%
Duty ratio : switching 55kHz			45	55	75	

■ General description

Vxx4xxxA series uses advanced trench technology to provide excellent Rds(ON) and low gate charge. Both N-ch & P-ch are available for this series. And some products have internal ESD protection.

■ Application

- Load switches
- Inverters
- PWM applications
- DC-DC converters

■ Package

- SOT-8, TSSOP-8, SOT-23, SOT-26, SC-70, SC-70-6, TO-252-3

■ Selection guide

Vxx4xxxA-x

Symbol		
a , b	Product code	Number
c	Feature	4: Sigle
d , e	Product number	Number
f	Package	A: SOP-8 B: TSSOP-8 C: SOT-23 E: SOT-26 F: SC-70 G: SC-70-6 L: TO-252-3
g	Product version	A
h	Taping direction	S: TSSOP-8, SOT-23, SOT-26 SC-70, SC-70-6, TO-252-3 N: SOP-8 Ref.P114 to P118

Vx x 4 x x x A - x
↑↑↑↑↑↑↑↑ ↑
a b c d e f g h

■ Pin configuration

SOT-8(TOP VIEW)

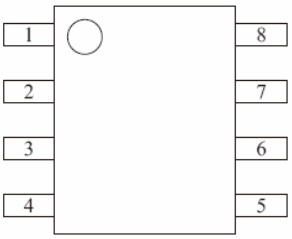

Pin No.	Pin name
1	SOURCE
2	SOURCE
3	SOURCE
4	GATE
5	DRAIN
6	DRAIN
7	DRAIN
8	DRAIN

SOT-8(TOP VIEW)

Pin No.	Pin name
1	DRAIN
2	SOURCE
3	SOURCE
4	GATE
5	DRAIN
6	SOURCE
7	SOURCE
8	DRAIN

SOT-23(TOP VIEW)

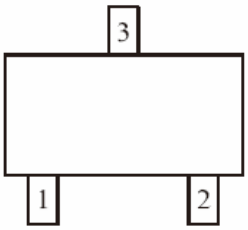

Pin No.	Pin name
1	GATE
2	SOURCE
3	DRAIN

SOT-26(TOP VIEW)

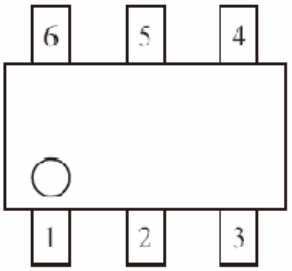

Pin No.	Pin name
1	DRAIN
2	DRAIN
3	GATE
4	SOURCE
5	DRAIN
6	DRAIN

SC-70-6(TOP VIEW)

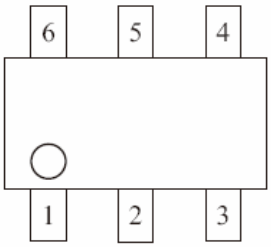

Pin No.	Pin name
1	DRAIN
2	DRAIN
3	GATE
4	SOURCE
5	DRAIN
6	DRAIN

SC-70 (TOP VIEW)

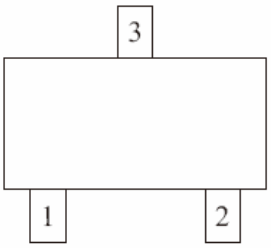

Pin No.	Pin name
1	GATE
2	SOURCE
3	DRAIN

SOT-252-3(TOP VIEW)

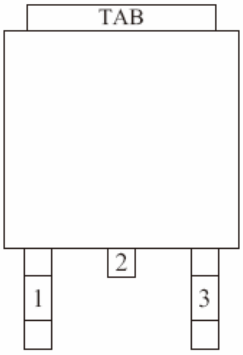

Pin No.	Pin name
1	GATE
2	DRAIN
3	SOURCE

■ Circuit

N-ch

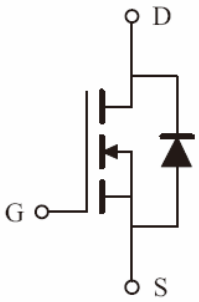

N-ch with ESD

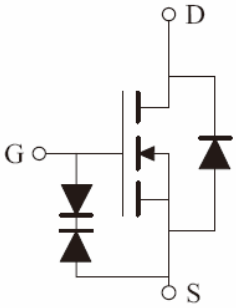

P-ch

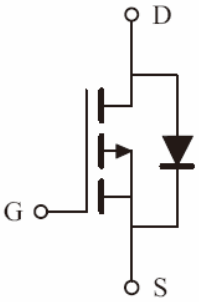

P-ch with ESD

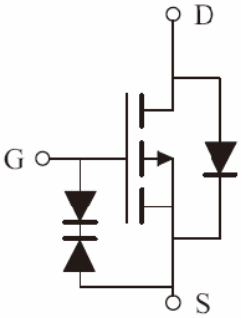

■ N-ch

Ta=25℃

Product	Package	Maximum Absolute Ratings					Electrical Characteristics							
		Vds	Vgs	Id	Idm	Pd	Vgs(th) (Max.)	Rds(ON)(Typ.) Vgs=10V		Rds(ON)(Typ.) Vgs=4.5V		Rds(ON)(Typ.) Vgs=2.5/1.8V		Ciss (Typ.)
		V	V	A	A	W	V	mΩ						pF
V14404A	SOP-8	30	±12	8.5	60	3.00	1.4	Id=8.5A	20.5	Id=8.5A	25.0	Id=5.0A	40	857
V14406AA		30	±12	11.5	80	3.00	1.5	Id=12.0A	11.5`	Id=10.0A	13.5	Id=8.0A	19.5	1630
V14408AA		30	±12	12.0	80	3.00	2.5	Id=12.0A	10.5	Id=10.0A	13.0			1020
V14410AA		30	±12	18.0	80	3.00	1.5	Id=18.0A	4.7	Id=15.0A	5.2			9130
V14412AA		30	±12	8.5	60	3.00	3.0	Id=8.5A	22.0	Id=5.0A	28.0			590
V14414AA		30	±20	8.5	50	3.00	3.0	Id=8.5A	20.0	Id=5.0A	31.0			680
V14418AA		30	±25	11.5	40	3.00	3.0	Id=10.0A	12.3	Id=5.0A	32.0			758
V14420AA		30	±12	13.7	60	3.00	2.0	Id=13.7A	8.3	Id=12.7A	9.7			3656
V14422AA		30	±20	11.0	50	3.00	3.0	Id=11.0A	12.6	Id=10.0A	19.6			1040
V14430AA		30	±20	18.0	80	3.00	2.5	Id=18.0A	4.7	Id=15.0A	6.2			6060
V14438AA		60	±20	8.2	40	3.10	3.0	Id=8.2A	16.3	Id=7.6A	20.0			1920
V14442AA		75	±25	3.1	20	2.50	3.0	Id=3.1A	100.0	Id=2.0A	120.0			303
V14444AA		30	±20	20.0	80	3.00	3.0	Id=20.0A	3.9	Id=15.0A	5.1			3200
V14450AA		40	±20	6.6	20	2.50	3.0	Id=6.6A	21.7	Id=5.5A	31.3			404
V14466AA		30	±20	9.4	50	3.10	3.0	Id=9.4A	17.0	Id=5.0A	27.0			621
V14468AA		30	±20	11.6	50	3.1	3.0	Id=11.6A	11.0	Id=10.0A	17.4			955
V34400AA		30	±20	10.0	50	2.50	2.5	Id=10.0A	9.5	Id=5.0A	13.0			3100
V34402AA		30	±20	8.0	32	2.50	2.5	Id=8.0A	17.0	Id=6.0A	26.0			1200
V34404AA		60	±20	5.5	20	2.50	2.5	Id=5.5A	42.0	Id=4.5A	55.0			650
V34406AA		40	±20	7.5	20	2.50	2.5	Id=7.5A	21.0	Id=6.5A	30.0			790
V34408AA		30	±20	8.0	32	2.50	2.5	Id=8.0A	15.0	Id=7.0A	22.0			1200
V34414AA		30	±20	15.0	50	2.50	3.0	Id=15.0A	6.8	Id=12.0A	8.8			1900
V13400AA	SOP-23	30	±12	5.8	30	1.40	1.4	Id=5.8A	22.8	Id=5.0A	27.3	Id=4.0A	43.3	823
V13402AA		30	±12	4.0	15	1.40	1.4	Id=4.0A	45.0	Id=3.0A	55.0	Id=2.0A	83	390
V13404AA		30	±20	5.8	20	1.40	3.0	Id=5.8A	22.5	Id=5.0A	34.5			680
V13406AA		30	±20	3.6	15	1.40	3.0	Id=3.6A	50.0	Id=2.8A	75.0			288
V13410AA		30	±12	5.8	30	1.40	1.0	Id=5.8A	23.0	Id=5.0A	26.0	＊	＊54	767
V13414AA		20	±8	4.2	15	1.40	1.0	Id=15.0A		Id=4.2A	41.0	＊	＊67	436
V13416AA		20	±8	6.5	30	1.40	1.0	Id=15.0A		Id=6.5A	18.0	＊	＊26	1160
V13418AA		30	±12	3.8	15	1.40	1.8	Id=15.0A	43.0	Id=3.5A	52.0	Id=1.0A	101	226
V13420AA		20	±12	6.0	25	1.40	1.0	Id=15.0A	19.0	Id=5.0A	22.0	＊	＊45.0	630
V13422AA		55	±12	2.1	10	1.25	2.0			Id=2.1A	125.0	Id=1.5A	157	214
V33400AA		30	±12	6.0	30	1.25	1.4	Id=6.0A	23.0	Id=5.0A	27.0	Id=4.0A	43	740
V33402AA		20	±12	3.0	20	0.60	1.2			Id=3.0A	50.0	Id=1.5A	70	450
V33404AA		30	±20	3.0	20	0.60	2.5	Id=3.0A	48.0	Id=1.5A	70.0			450
V33408AA		20	±16	3.0	20	0.60	1.2			Id=3.0A	42.0	Id=1.5A	60	450
V33410AA		20	±12	5.0	30	1.25	1.2			Id=5.0A	27.0	Id=2.0A	＊57.0	740
V2N7002K		60	±20	0.2	0.8	0.20	2.0	Id=0.5A	2300.0	Id=75mA	3300.0			50

Vds : Drain-Sourse voltage
Vgs : Gate-Sourse voltage
＊Rds(ON):Vgs=1.8V
Id : Continuous drain current
Idm : Pulsed drain current
Pd : Power dissipation
Vgs(th) : Gate-Sourse voltage
Rds(ON) :Static Drain-Source on resistance
Ciss : Input capacitance
Junction and storage temperature ranre : : -55℃ to 150℃

Ta=25℃

Product	Package	Maximum Absolute					Electrical Characteristics							
		V	Vgs	Id	Idm	Pd	Vgs(th) (Max.)	Rds(ON)(Typ.) Vgs=	Vgs	Vgs=2.5v/1.8V				Ciss (Typ.)
		V	V	A	A	W	V	MΩ						pF
V16400EA	SOT-26	30	±12	6.9	35	2.0	1.4	Id=6.9	22.3	Id=6.0A	26.8	Id=5.0	42.8	823
V16402EA		30	±20	6.9	20	2.0	3.0	Id=6.9	22.5	Id=5.0A	34.5			680
V16404EA		20	±12	8.6	30	2.0	1.0	Id=8.5	13.4	Id=5.0A	14.8	*	*	181
V16408EA		20	±12	8.8	40	2.0	1.0	Id=8.8	14.4	Id=8.0A	16.0	*	*	181
V36400EA		30	±20	7.0	20	1.6	3.0	Id=7.0	23.0	Id=5.0A	32.0			680
V36402EA		20	±12	6.5	20	1.6	1.2			Id=6.5A	20.0	Id=5.0	25.0	112
V17400FA	SC-70	30	±12	1.7	10	0.35	1.4	Id=1.5	70.0	Id=1.5A	81.0	Id=1.0	114.0	390
V17404FA		20	±8	1.0	5	0.35	0.8			Id=1.0A	186.	*	*	101
V17410FA		30	±12	1.6	10	0.35	1.8	Id=1.6	75.0	Id=1.5A	82.0	Id=1.0	120.	226
V37400FA		20	±12	1.8	10	0.35	1.2			Id=1.8A	50.0	*	*	418
V17408GA	SC-70-6	20	±8	2.2	10	0.62	0.8			Id=2.2A	67.0	*	*	499
V17412GA		30	±12	2.1	10	0.62	1.8	Id=2.1	69.0	Id=1.3A	78.0	Id=1.0	130.	226
V32400LA	TO-252-3	60	±20	10.0	32	32.0	2.5	Id=10.0	42.0	Id=8.0A	59.0			650
V32402LA		20	±16	20.0	40	26.0	1.0					Id=5.0	55.0	195
V32404LA		30	±20	12.0	30	32.0	2.5	Id=12.0	18.0	Id=6.0A	25.0			790
V32406LA		25	±20	65.0	200	50.0	3.0	Id=25.0	7.0	Id=20.0A	11.0			120
V32408LA		40	±20	10.0	40	32.0	2.5	Id=10.0	21.0	Id=8.0A	30.0			790
V32410LA		25	±20	10.0	30	50.0	3.0	Id=10.0	21.0	Id=7.0A	31.0			710
V32412LA		40	±20	12.0	45	41.0	3.0	Id=12.0	21.0	Id=10.0A	35.0			760
V32414LA		25	±20	35.0	120	50.0	2.5	Id=15.0	15.5	Id=15.0A	23.0			530
V32416LA		25	±20	46.0	140	55.0	2.5	Id=20.0	14.0					600
V32418LA		40	±20	20.0	50	42.0	3.0	Id=20.0	12.5					114
V32420LA		20	±12	45.0	140	48.0	1.25					Id=9.0	18.0	500
V32422LA		25	±20	60.0	140	60.0	2.5	Id=22.0	10.5					600
V32424LA		25	±20	50.0	200	50.0	3.0	Id=25.0	7.5	Id=20.0A	11.0			120
V32426LA		25	±20	75.0	200	96.0	3.0	Id=45.0	3.5	Id=30.0A	4.8			401
V32428LA		25	±20	75.0	170	60.0	3.0	Id=30.0	5.0	Id=24.0A	6.6			270
V32430LA		25	±20	45.0	140	55.0	2.5	Id=20.0	15.0					600
V32432LA		27	±20	50.0	150	50.0	3.0	Id=25.0	10.0	Id=20.0A	15.0			120

＊Rds(ON):Vgs=1.8V

Vds ：Drain-Sourse voltang
Vgs ：Gate-Sourse voltage
Id ：Continuous drain current
Idm ：Pulsed drain current
Pd ：Power dissipation
Vgs (th) ：Gate threshold voltage
Rds(ON)：Static Drain-Source on resistance
Ciss ：Input capacitance
Junction and storage temperature range
:-55˚C to 150˚C

■ P-ch

Ta=25˚C

Product	Package	Maximum Absolute					Electrical Characteristics							
		Vds	Vgs	Id	Idm	P	Vgs(th) (Max.)	Rds(ON)(Typ.)						Ciss (Tpy.)
								Vgs=-10V		Vgs=-4.5V		Vgs=-2.5v/-1.8		
		V	V	A	A	W	V	MΩ						pF
V14405AA		-30	±20	-6.0	-30	3.0	-3.0	Id=6.0A	40.0	Id=-4.0A	65.0			700
V14407AA		-30	±25	-12.0	-60	3.0	-3.0	Id=10.0A	11.0	Id=-10.0A	24.0			2076
V14409AA		-30	±20	-15.0	-80	3.0	-2.7	Id=15.0A	6.2	Id=-10.0A	9.5			5270
V14411AA		-30	±20	-8.0	-40	3.0	-2.4	Id=8.0A	24.5	Id=-5.0A	41.0			920
V14413AA		-30	±25	-15.0	-80	3.0	-3.5	Id=15.0A	7.2					4360
V14415AA		-30	±25	-8.0	-40	3.0	-3.5	Id=8.0A	28.5					893
V14419AA		-30	±20	-9.7	-40	3.0	-2.7	Id=9.7A	16.0	Id=-7.0A	26.0			1573
V14423AA		-30	±25	-15.0	-80	3.1	-3.5	Id=15.0A	6.8					4632
V14425AA		-38	±25	-14.0	-50	3.1	-3.5	Id=14.0A	8.8					3800
V14427AA		-30	±25	-12.5	-60	3.0	-3.0	Id=10.0A	11.5	Id=-5.0A	32.0			2330
V14429AA		-30	±20	-15.0	-80	3.1	-2.7	Id=15.0A	6.4	Id=-10.0A	9.0			5355
V14433AA		-30	±25	-11.0	-50	3.0	-4.0	Id=10.0A	13.8	Id=-4.0A	38.5			1760
V14437AA		-12	±8	-11.0	-20	3.0	-1.0			Id=-11.0A	12.4	∗Id=-6.0A	∗20.4	3960
V14443AA		-40	±20	-6.5	-20	3.1	-3.0	Id=6.0A	33.3	Id=-5.0A	48.0			657
V34401AA	SOP-8	-30	±20	-8.0	-30	2.5	-2.5	Id=8.0A	28.0	Id=-6.0A	44.0			970
V34403AA		-55	±20	-4.5	-20	2.5	-2.5	Id=4.5A	60.0	Id=-3.5A	90.0			760
V34405AA		-40	±20	-5.5	-20	2.5	-2.5	Id=5.5A	38.0	Id=-4.5A	65.0			690
V34407AA		-30	±25	-8.0	-30	2.5	-2.5	Id=8.0A	26.0	Id=-6.0A	44.0			920
V34409AA		-30	±20	-9.0	-50	2.5	-3.0	Id=9.0A	15.0	Id=-7.0A	25.0			1610
V34411AA		-30	±25	-12.0	-50	2.5	-3.0	Id=12.0A	12.0	Id=-9.0A	18.0			3000
V34413AA		-30	±25	-12.0	-50	2.5	-3.0	Id=12.0A	10.0	Id=-9.0A	15.0			3450
V34415AA		-30	±25	-12.0	-50	2.5	-3.0	Id=13.0A	9.0	Id=-10.0A	13.0			4200
V34417AA		-30	±20	-6.0	-30	2.5	-3.0	Id=6.0A	37.0	Id=-5.0A	60.0			530
V34419AA		-30	±25	-10.0	-55	3.0	-3.0	Id=10.0A	15.0	Id=-7.0A	25.0			1490
V18403BA	TSSOP-8	-20	±8	-4.0	-30	1.5	-1.0			Id=-4.0A	35.0	∗	∗	1450

∗Rds(ON):Vgs=1.8V

Vds ：Drain-Sourse voltage
Vgs ：Gate-Sourse voltage
Id ：Continuous drain current
Idm ：Pulsed drain current
Pd ：Power dissipation
Vgs (th) ：Gate threshold voltage
Rds(ON)：Static Drain-Source on resistance
Ciss ：Input capacitance
Junction and storage temperature range
:-55°C to 150°C

Ta=25˚C

Product	Package	Maximum Absolute Ratings					Electrical Characteristics							
		Vds	Vgs	Id	Idm	Pd	Vgs(th) (Max.)	Rds(ON)(Typ.) Vgs=10V		Vgs=4.5V		Vgs=2.5/1.8V		Ciss (Typ.)
		V	V	A	A	W	V	mΩ						pF
V13401CA	SOT-23	-30	±12	-4.2	-30	1.4	-1.3	Id=-4.2A	42.0	Id=-4.0A	53.0	Id=-1.0A	80	954
V13403CA		-30	±12	-2.6	-20	1.4	-1.4	Id=-2.6A	102.0	Id=-2.0A	128.0	Id=-1.0A	187	409
V13405CA		-30	±12	-2.6	-30	1.4	-2.3	Id=-2.6A	102.0	Id=-2.0A	137.0			481
V13407CA		-30	±20	-4.1	-20	1.4	-3.0	Id=-4.1A	40.5	Id=-3.0A	64.0			700
V13409CA		-30	±20	-2.6	-20	1.4	-3.0	Id=2.6A	97.0	Id=-2.0A	166.0			302
V13413CA		-30	±8	-3.0	-15	1.4	-1.0			Id=-3.0A	81.0	*Id=-1.0A	*146.0	540
V13415CA		-30	±8	-4.0	-30	1.4	-1.0			Id=-4.0A	35.0	*Id=-2.0A	*56.0	1450
V13419CA		-30	±12	-3.5	-15	1.4	-1.4	Id=-3.5A	59.0	Id=-3.0A	76.0	Id=-1.0A	111.0	512
V13421CA		-30	±20	-2.6	-20	1.4	-3.0	Id=-2.6A	97.0	Id=-2.0A	166.0			302
V33401CA		-20	±12	-3.0	-10	1.25	-1.2	Id=-2.0A	72.0	Id=-2.0A	98.0	Id=-1.0A	150.0	430
V33403CA		-20	±12	-4.0	-20	1.25	-1.2			Id=-4.0A	55.0	*Id=-2.0A	*90.0	950
V33405CA		-20	±20	-2.0	-10	1.25	-2.5	Id=-2.0A	100.0	Id=-1.0A	180.0			410
V33407CA		-20	±12	-3.0	-10	1.25	-1.2			Id=-2.0A	100.0	Id=-1.0A	180	410
V33411CA		-20	±12	-3.0	-10	1.25	-1.2			Id=-4.0A	84.0	*Id=-1.0A	*185.0	540
V16401EA	SOT-26	-30	±20	-5.0	-30	2.0	-1.3	Id=-5.0A	42.0	Id=-5.0A	53.0	*Id=-1.0A	81	943
V16403EA		-30	±20	-6.0	-30	2.0	-2.4	Id=-6.0A	28.0	Id=-4.0A	44.0			920
V16405EA		-30	±20	-5.0	-20	2.0	-3.0	Id=-5.0A	39.0	Id=-4.0A	67.0			700
V16409EA		-20	±8	-5.0	-30	2.0	-1.0			Id=-5.0A	37.0	*Id=-2.0A	*57.0	1450
V36401EA		-20	±12	-3.0	-10	1.25	-1.2	Id=-2.0A	72.0	Id=-2.0A	98.0	*Id=-1.0A	150	430
V36403EA		-20	±20	-5.0	-20	2.0	-3.0	Id=-5.0A	42.0	Id=-4.0A	66.0			700
V36405EA		-20	±12	-5.0	-20	2.0	-1.2			Id=5.0A	37.0	*Id=-2.0A	*75.0	1100
V17401FA	SC-70	-30	±8	-1.2	-10	0.35	-1.4	Id=-1.2A	122.0	Id=-1.2A	147.0	*Id=-1.0A	207.0	409
V17403FA		-20	±8	-0.7	-3	0.35	-0.9			Id=-0.7A	388.0	*Id=-.05A	*666.0	114
V17407FA		-20	±12	-1.2	-10	0.35	-1.0			Id=-1.2A	111.0	*Id=-1.0A	*169.0	540
V17413FA		-20	±12	-1.4	-3	0.35	-1.4	Id=-1.4A	94.0	Id=-1.3A	111.0	Id=-1.1A	150.0	512
V37401FA		-20	±12	-1.4	-10	0.35	-1.2			Id=-1.4A	98.0	*Id=-1.0A	*250.0	476
V17405GA	SC-70-6	-30	±12	-1.6	-10	0.625	-1.4	Id=-1.6A	115.0	Id=-1.0A	135.0	Id=-1.0A	190	409
V17411GA		-20	±8	-1.8	-10	0.625	-0.8			Id=-1.8A	95.0	*Id=-1.0A	*155.0	524
V17415GA		-20	±12	-2.0	-8	0.625	-1.4	Id=-2.0A	80.0	Id=-1.3A	98.0	Id=-1.0A	130	512
V32401LA	TO-252-3	-60	±20	-7.0	-30	28.0	-3.0	Id=-7.0A	70.0	Id=-6.0A	100.0			760
V32403LA		-40	±20	-8.0	-32	28.0	-2.5	Id=-8.0A	38.0	Id=-6.0A	65.0			690
V32405LA		-30	±20	-12.0	-30	48.0	-3.0	Id=-12.0A	37.0	Id=-10.0A	60.0			530
V32407LA		-40	±20	-18.0	-40	42.0	-3.0	Id=-18.0A	22.0					1570
V32409LA		-40	±20	-10.0	-32	30.0	-3.0	Id=-10.0A	38.0	Id=-8.0A	57.0			660
V32411LA		-55	±20	-7.0	-30	28.0	-2.5	Id=-7.0A	60.0	Id=-6.0A	90.0			760
V32413LA		-20	±12	-10.0	-24	25.0	-1.2			Id=-3.0A	93.0	Id=-2.0A	124.0	430

Vds : Drain-Sourse voltage Vgs : Gate-Sourse voltage ＊Rds(ON):Vgs=1.8V
Id : Continuous drain current Idm : Pulsed drain current
Pd : Power dissipation Vgs(th) : Gate-Sourse voltage
Rds(ON) :Static Drain-Source on resistance Ciss : Input capacitance
Junction and storage temperature ranre : : -55℃ to 150℃

■ General description

Vxx7xxxA series uses advanced trench technology to provide excellent Rds(ON) and low gate charge. Both N-ch & P-ch are available for this series.

■ Application

- Bidirectional blocking switches
- DC/DC converters

■ Package

- SOT-8, TSSOP-8, SOT-26,

■ Selection guide

Vxx7xxxA-x

Symbol		
a , b	Product code	Number
c	Feature	7: Sigle with schottky diode
d , e	Product number	Number:1 to 9
f	Package	A: SOP-8 B: TSSOP-8 C: SOT-26
g	Product version	A
h	Taping direction	S: TSSOP-8, SOT-26 Ref.P114 to P118 N: SOP-8 Ref. P116

Vx x 7 x x x A - x
↑↑↑↑↑↑↑↑ ↑
a b c d e f g h

■ Pin configuration

SC-8(TOP VIEW)

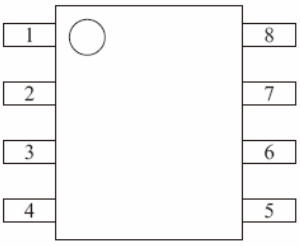

V14700AA, V14701AA

Pin No.	Pin name
1	ANODE
2	ANODE
3	SOURCE
4	GATE
5	DRAIN
6	DRAIN
7	CATHODE
8	CATHODE

V14702AA

Pin No.	Pin name
1	SOURCE
2	SOURCE
3	SOURCE
4	GATE
5	DRAIN
6	DRAIN
7	DRAIN
8	DRAIN

V14704AA

Pin No.	Pin name
1	SOURCE/ ANODE
2	SOURCE/ ANODE
3	SOURCE/ ANODE
4	GATE
5	DRAIN/ CATHODE
6	DRAIN/ CATHODE
7	DRAIN/ CATHODE
8	DRAIN/ CATHODE

TSSO-8(TOP VIEW)

V18701BA

Pin No.	Pin name
1	DRAIN
2	SOURCE
3	SOURCE
4	GATE
5	ANODE
6	ANODE
7	ANODE
8	CATHODE

SOT-26(TOP VIEW)

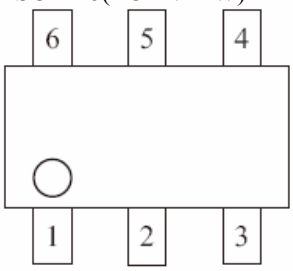

V16700EA
V16704EA

Pin No.	Pin name
1	CATHODE
2	SOURCE
3	GATE
4	DRAIN
5	DRAIN
6	ANODE

V16701EA, V16702EA
V16706EA

Pin No.	Pin name
1	ANODE
2	SOURCE
3	GATE
4	DRAIN
5	No Connection
6	CATHODE

■ Circuit

N-ch
V14700AA
V1670xEA

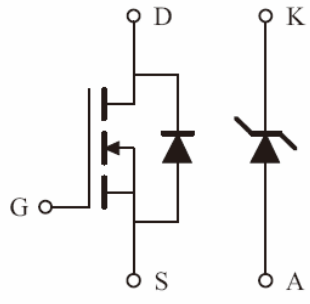

V14702AA
V16704EA

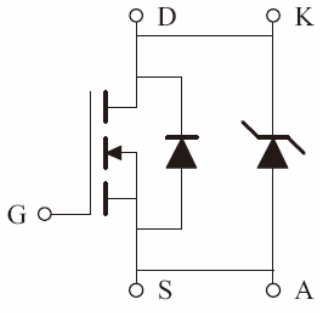

P-ch
V14701AA
V18701BA
V16701EA

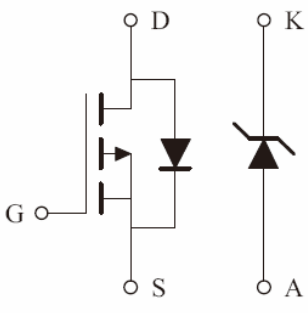

■N-ch

Ta=25℃

Product	Package	Maximum Absolute Ratings							Electrical Characteristics					
		Vds	Vgs	Id	Idm	Vka	If	Pd	Vgs(th) (Max.)	Rds(ON)(Typ.) Vgs=10V	Rds(ON)(Typ.) Vgs=4.5V	Rds(ON)(Typ.) Vgs=2.5V/1.8V	Ciss (Typ.)	Vf (Max.)
		V	V	A	A	V	A	W	V	mΩ			pF	
V14700AA	SOP-8	30	±20	6.9	30	30	4.0	2.0	3.0	Id=6.9A 22.5	Id=5.0A 34.5		680	0.5@3A
V14702AA		30	±20	11.0	50	30	4.4	3.0	3.0	Id=11.0A 13.4	Id=8.0A 20.0		1040	0.5@1A
V14704AA		30	±12	13.0	40	30	4.4	3.1	2.0	Id=13.0A 9.1	Id=12.2A 10.5		3656	0.5@0.5A
V14705AA	SOP-26	20	±8	4.1	10	20	1.5	1.39	1.0		Id=4.1A 41.6	*Id=4.1A 41.6	449	0.5@0.5A
V14706AA		20	±8	3.8	10	20	2.0	1.15	1.0		Id=3.8A 41.6	*Id=2.8A 74.0	449	0.5@0.5A
V14707AA		30	±12	3.6	10	20	1.5	1.39	1.8	Id=3.6A 44.0	Id=3.4A 53.0	Id=1.0A 106.0	226	0.5@0.5A
V14708AA		30	±12	3.3	10	20	2.0	1.15	1.8	Id=3.3A 44.0	Id=6.9A 53.0	Id=1.0A 106.0	226	0.5@0.5A

＊Rds(ON):Vgs=1.8V

■P-ch

Ta=25℃

Product	Package	Maximum Absolute Ratings							Electrical Characteristics					
		Vds	Vgs	Id	Idm	Vka	If	Pd	Vgs(th) (Max.)	Rds(ON)(Typ.) Vgs=10V	Rds(ON)(Typ.) Vgs=4.5V	Rds(ON)(Typ.) Vgs=2.5V/1.8V	Ciss (Typ.)	Vf (Max.)
		V	V	A	A	V	A	W	V	mΩ			pF	
V14701AA	SPO-8	-30	±12	-5.0	-3.0	30	4.0	2.0	-1.3	Id=-5.0A 42.5	Id=-4.0A 54.0	Id=-1.0A 83.0	952	0.5@1A
V18701BA	TSSOP-8	-30	±12	-4.2	-3.0	30	3.0	1.4	-1.3	Id=-4.2A 43.0	Id=-4.0A 54.0	Id=-1.0A 82.0	954	0.5@1A
V16701EA	SOT-26	-30	±12	-2.3	-1.5	20	2.0	1.15	-1.4	Id=-2.3A 107.0	Id=-2.0A 135.0	Id=-1.0A 195.0	409	0.5@0.5A

Vds : Drain-Sourse voltage(MOSFET) Vgs : Gate-Sourse voltage(MOSFET)
Id : Continuous drain current(MOSFET) Idm : Pulsed drain current(MOSFET)
Vka :Schottky reverse voltages(Schottky) If : Continuous forward current(Schottky)
Pd : Power dissipation(left:MOSFET light:Schottky) Vgs(th) :Gate-Sourse voltage
Rds(ON) :Static Drain-Source on resistance Ciss : Input capacitance(dynamic parameter)
Vf :Forward voltage drop(Schottky) Junction and storage temperature ranre(MOSFET and Schottky)
: -55℃ to 150℃

■ General description

Vxx8xxxA series uses advanced trench technology to provide excellent Rds(ON) and low gate charge. N-ch, N-ch common drain, and P-ch are available for this series. And some products have internal ESD protection.

■ Application

- Load switches
- Inverters
- PWM applications
- DC-DC converters

■ Package

- SOT-8, TSSOP-8
  SOT-26, SC-70-6

■ Selection guide

Vxx8xxxA-x

Symbol		
a , b	Product code	Number
c	Feature	8: Dual
d , e	Product number	Number:1 to 9
f	Package	A: SOP-8 B: TSSOP-8 C: SOT-26 G: SC-70-6
g	Product version	A
h	Taping direction	S: TSSOP-8, SOT-26, SC-70-6 N: SOP-8 Ref.P114 to P117

*Taping direction is one way.

Vx x 8 x x x A - x
↑↑↑↑↑↑↑↑ ↑
a b c d e f g h

■ Pin configuration: N-ch, P-ch

SOT-8(TOP VIEW)

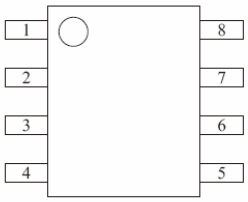

	V148xxAA	V348xxAA
Pin No.	Pin name	Pin name
1	SOURCE2	SOURCE1
2	GATE2	GATE1
3	SOURCE1	SOURCE2
4	GATE1	GATE2
5	DEAIN1	DRAIN2
6	DEAIN1	DRAIN2
7	DEAIN2	DEAIN1
8	DEAIN2	DEAIN1

TSSOP-8(TOP VIEW)

Pin No.	Pin name
1	DEAIN1
2	SOURCE1
3	SOURCE1
4	GATE1
5	GATE2
6	SOURCE2
7	SOURCE2
8	DRAIN2

SOT-26(TOP VIEW)

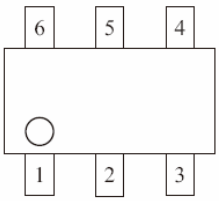

Pin No.	Pin name
1	GATE1
2	SOURCE2
3	GATE2
4	DRAIN2
5	SOURCE1
6	DEAIN1

SOT-26(TOP VIEW)

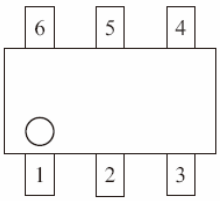

Pin No.	Pin name
1	SOURCE1
2	GATE1
3	DRAIN2
4	SOURCE2
5	GATE2
6	DEAIN1

■ Pin configuration: N-ch common drain, N-ch common drain with ESD

TSSOP-8(TOP VIEW)

Pin No.	Pin name
1	DEAIN1/ DEAIN2
2	SOURCE1
3	SOURCE1
4	GATE1
5	GATE2
6	SOURCE2
7	SOURCE2
8	DRAIN1/ DRAIN2

■ Circuit

N-ch

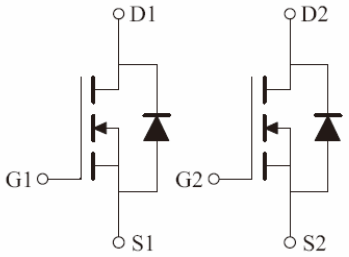

N-ch with ESD

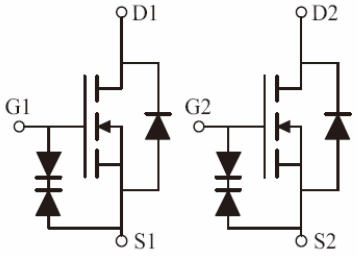

N-ch common drain

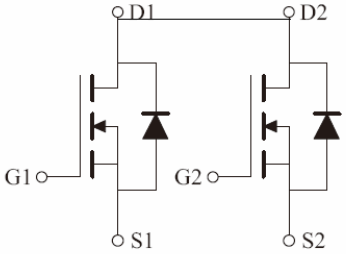

N-ch common drain with ESD

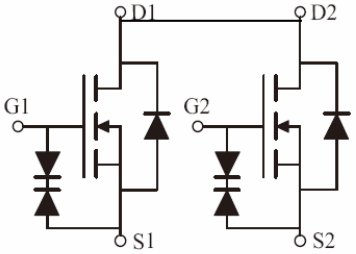

P-ch

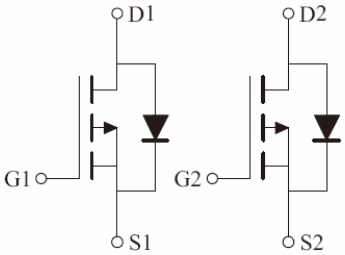

P-ch with ESD

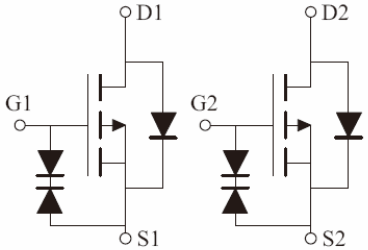

■ N-ch

Ta=25˚C

Product	Package	Maximum Absolute Ratings					Electrical Characteristics							
		Vds	Vg	Id	I	Pd	Vgs	Rds(ON)(Typ.)						Ciss (Tpy.)
								Vgs=-10V		Vgs=-4.5V		Vgs=-2.5v/-		
		V	V	A	A	W	V	MΩ						pF
V14800AA	SOP-8	30	±12	6.9	40	2.0	1.4	Id=6.9A	22.6	Id=6.0A	27.0	Id=5.0A	42.0	858
V14806AA		30	±12	9.4	40	2.0	1.0	Id=9.4A	11.0	Id=8.0A	12.6	∗Id=4.0A	∗23.4	1810
V14812AA		30	±20	6.9	30	2.0	3.0	Id=6.9A	22.5	Id=5.0A	34.5			680
V14816AA		30	±25	8.5	40	2.0	3.0	Id=8.5A	16.0	Id=5.0A	36.0			758
V14818AA		30	±20	8.5	40	2.0	3.0	Id=8.5A	15.5	Id=6.0A	23.0			1040
V14822AA		30	±20	8.5	30	2.0	3.0	Id=8.5A	13.4	Id=6.0A	21.0			1040
V14824AA Q1		30	±20	8.5	30	2.0	3.0	Id=8.5A	13.8	Id=6.0A	21.0			1040
V14824AA Q2		30	±12	9.8	40	2.0	2.0	Id=9.8A	10.5	Id=9.0A	12.0			3656
V14826AA		60	±20	6.3	40	2.0	3.0	Id=6.3A	20.0	Id=5.7A	22.0			1920
V14828AA		60	±20	4.5	20	2.0	3.0	Id=4.5A	46.0	Id=3.0A	64.0			450
V14836AA		30	±20	7.2	30	2.0	3.0	Id=7.2A	20.0	Id=4.0A	30.0			522
V14842AA		30	±20	7.5	30	2.0	3.0	Id=7.5A	18.0	Id=5.0A	28.0			621
V34802AA		30	±20	4.5	20	2.0	3.0	Id=4.5A	55.0					200
V34804AA		60	±20	4.5	20	2.0	2.5	Id=4.5A	42.0	Id=4.0A	55.0			650
V34806AA		40	±20	7.0	40	2.0	3.0	Id=7.0A	21.0	Id=6.0A	30.0			790
V34808AA		30	±20	7.0	20	2.0	2.5	Id=7.0A	18.0	Id=6.0A	25.0			790
V34810AA		30	±20	7.0	40	2.0	3.0	Id=7.0A	15.0	Id=6.0A	21.0			1650
V34812AA		20	±12	7.0	38	2.0	1.2			Id=7.0A	15.0	Id=6.0A	21.0	1082
V34814AA		30	±20	7.0	40	2.0	3.0	Id=7.0A	15.0	Id=6.0A	21.0			830
V16800EA	SOT-26	30	±12	3.4	20	1.15	1.4	Id=3.4A	50.0	Id=3.0A	60.0	Id=2.0A	88.0	390
V36800EA		30	±20	3.5	10	1.15	2.5	Id=3.5A	55.0	Id=2.0A	7.0			200
V36802EA		30	±12	3.5	15	1.15	1.4	Id=3.5A	55.0	Id=3.0A	65.0	Id=2.0A	100.0	390
V17800GA	SC-70-6	20	±8	0.9	5	0.3	0.9			Id=0.9A	181.0	∗	∗317.0	101

∗Rds(ON):Vgs=1.8V

Vds : Drain-Sourse voltage
Vgs : Gate-Sourse voltage
Id : Continuous drain current
Idm : Pulsed drain current
Pd : Power dissipation
Vgs(th) : Gate-Sourse voltage
Rds(ON) :Static Drain-Source on resistance
Ciss : Input capacitance
Junction and storage temperature ranre
: -55℃ to 150℃

■ N-ch common drian

Ta=25℃

Product	Package	Maximum Absolute Ratings					Electrical Characteristics							
		Vds	Vgs	Id	Idm	Pd	Vgs(th) (Max.)	Rds(ON)(Typ.) Vgs=10V		Vgs=4.5		Vgs=2.5V/1.8V		Ciss (Typ.)
		V	V	A	A	W	V	mΩ						pF
V18804BA	TSSOP-8	20	±12	8.0	30	1.5	1.0	Id=0.8A	10.0	Id=5.0A	11.5	*Id=3.0A	*22.2	1810
V18806BA		20	±8	7.0	30	1.5	1.0			Id=7.0A	16.5	*Id=5.0A	*24.0	1160
V18810BA		20	±8	7.0	30	1.5	1.0			Id=7.0A	16.5	*Id=5.0A	*24.0	1160
V18814BA		20	±12	7.5	30	1.5	1.0	Id=7.5A	13.0	Id=7.0A	15.0	*Id=5.0A	*26.0	1139
V18816BA		30	±12	8.0	30	1.5	1.4	Id=0.8A	12.2	Id=5.0A	13.0	Id=4.0A	17.6	1130
V18818BA		30	±12	7.0	30	1.5	1.5	Id=0.7A	15.0	Id=5.0A	17.0	Id=4.0A	22.0	880
V18820BA		20	±12	7.0	25	1.5	1.0	Id=0.7A	16.5	Id=6.6A	19.0	*Id=2.0A	*35.0	615
V18822BA		20	±12	7.0	30	1.5	1.0	Id=0.7A	16.4	Id=6.6A	19.0	*Id=2.0A	*36.0	630

*Rds(ON):Vgs=1.8V

■ P-ch

Ta=25℃

Product	Package	Maximum Absolute Ratings					Electrical Characteristics							
		Vds	Vgs	Id	Idm	Pd	Vgs(th) (Max.)	Rds(ON)(Typ.) Vgs=10V		Vgs=4.5		Vgs=2.5V/1.8V/-1.5V		Ciss (Typ.)
		V	V	A	A	W	V	mΩ						pF
V14801AA	SOP-8	-30	±12	-5.0	-30	2.0	-1.3	Id=-5.0A	42.0	Id=-4.0A	54.0	*Id=-1.0A	80.0	952
V14803AA		-30	±20	-5.0	-20	2.0	-3.0	Id=-5.0A	39.0	Id=-4.0A	67.0			700
V14805AA		-30	±25	-8.0	-40	2.0	-3.0	Id=-8.0A	16.0	Id=-5.0A	33.0			2076
V14807AA		-30	±20	-6.0	-30	2.0	-2.4	Id=-6.0A	28.0	Id=-5.0A	44.0			920
V14813AA		-30	±20	-7.1	-30	2.0	-2.7	Id=-7.1A	20.0	Id=-5.6A	29.0			1573
V14815AA		-30	±25	-8.0	-40	2.0	-3.0	Id=-8.0A	16.0	Id=-5.0A	37.0			2330
V14817AA		-30	±25	-8.0	-40	2.0	-3.0	Id=-8.0A	17.1	Id=-4.0A	44.0			1760
V14821AA		-12	±8	-8.0	-20	2.0	-1.0			Id=-8.0A	14.8	*Id=-5.0A	*22.4	3960
V34801AA		-30	±20	-6.0	-30	2.5	-3.0	Id=-6.0A	40.0	Id=-5.0A	65.0			530
V18801BA	TSSOP-8	-20	±8	-4.7	-30	1.4	-1.0			Id=-4.7A	35.0	*Id=-2.0A	*54.0	1450
V18803BA		-12	±8	-7.0	-20	1.4	-1.0			Id=-7.0A	15.0	**Id=-1A	**28.0	3960
V17801GA	SC-70-6	-20	±8	-0.6	-3	0.3	-0.9			Id=-0.6A	400.0	*Id=-0.4A	*700	114

*Rds(ON):Vgs=1.8V,**Rds(ON):Vgs=1.5V

Vds : Drain-Sourse voltage
Vgs :Gate-Sourse voltage
Id :Cotinuous drain current
Idm :Pulsed drain current
Pd :Power dissipation
Vgs(th) :Gate threshold voltage
Rds(ON) :Static Drain-Source on resistance
Ciss :Input capacitance
Junction and storage temperature range
: -55 ℃ to 150 ℃

■ General description

Vxx9xxxA series uses advanced trench technology to provide excellent Rds(ON) and low gate charge. Both N-ch & P-ch are available for this series.

■ Application

- Bidirectional blocking switches
- DC/DC converters

■ Package

- SOT-8

■ Selection guide

Vxx9xxxA-N

Symbol		
a , b	Product code	Number
c	Feature	9: Dual
d , e	Product number	Number:1 to 9
f	Package	A: SOP-8
g	Product version	A
h	Taping direction	N: Ref.P116

Vx x 9 x x x A - N
↑↑↑↑↑↑↑↑ ↑
a b c d e f g h

■ Pin configuration

SOP-8(TOP VIEW)

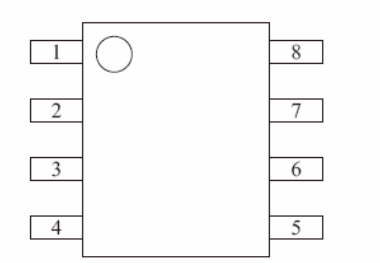

V14900AA

Pin No.	Pin name
1	SOURCE/ ANODE
2	GATE2
3	SOURCE1
4	GATE1
5	DRAIN1
6	DRAIN1
7	DRAIN2/ CATHODE
8	DRAIN2/ CATHODE

V14902AA

Pin No.	Pin name
1	SOURCE/ ANODE2
2	GATE2
3	SOURCE/ ANODE4
4	GATE1
5	DRAIN/ CATHODE1
6	DRAIN/ CATHODE1
7	DRAIN/ CATHODE2
8	DRAIN/ CATHODE2

V14904AA

Pin No.	Pin name
1	SOURCE2
2	GATE2
3	SOURCE1/ ANODE
4	GATE1
5	DRAIN1/ CATHODE
6	DRAIN1/ CATHODE
7	DRAIN2
8	DRAIN2

V14914AA

Pin No.	Pin name
1	SOURCE1/ ANODE
2	GATE1
3	SOURCE2
4	GATE2
5	DRAIN2
6	DRAIN2
7	DRAIN1/ CATHODE
8	DRAIN1/ CATHODE

V14906AA, V14912AA,
V14916AA, V14918AA,

Pin No.	Pin name
1	DRAIN2
2	DRAIN2
3	GATE1
4	SOURCE1/ ANODE
5	DRAIN1/ SOURCE2/ CATHODE
6	DRAIN1/ SOURCE2/ CATHODE
7	DRAIN1/ SOURCE2/ CATHODE
8	GATE2

■ Circuit

V14900AA

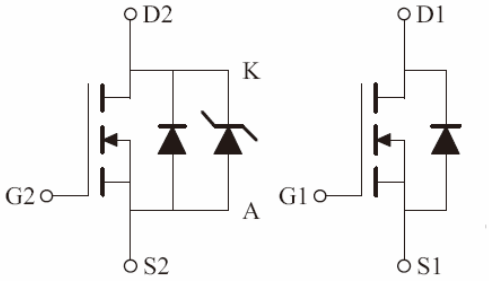

V14902AA

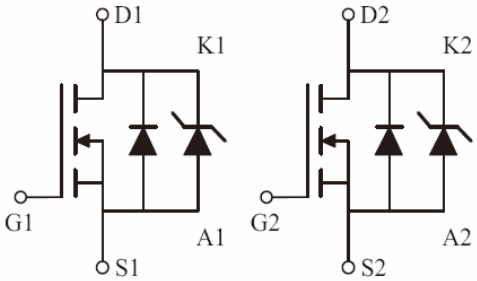

V14904AA
V14906AA

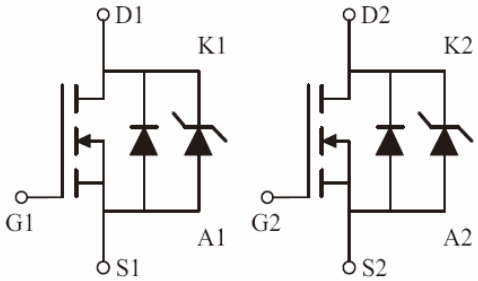

V14912AA, V14914AA
V14906AA, V14918AA

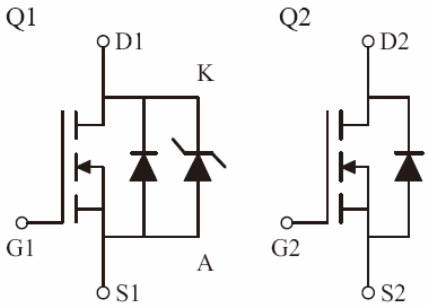

■ N-ch

Ta=25℃

Product	Package	Maximum Absolute Ratings							Electrical Characteristics					
		Vds	Vgs	Id	Idm	Vka	If	Pd	Vgs(th) (Max.)	Rds(ON)(Typ.) Vgs=10V	Rds(ON)(Typ.) Vgs=4.5V	Rds(ON)(Typ.) Vgs=2.5V	Ciss (Typ.)	Vf (Max.)
		V	V	A	A	V	A	W	V	mΩ			pf	
V14900AA	SOP-8	30	±12	6.9	40	30	3	2	1.4	Id=6.9A 22.6	Id=6.0A 27	Id=6.0A 42	846	0.5@1A
V14902AA		30	±12	6.9	40	30	3	2	1.4	Id=6.9A 22.6	Id=6.0A 27	Id=5.0A 42	846	0.5@1A
V14904AA		30	±12	6.9	40	30	3	2	1.4	Id=6.9A 22.6	Id=6.0A 27	Id=5.0A 42	846	0.5@1A
V14906AA		30	±12	7.0	40	30	3	2	1.4	Id=7.0A 22	Id=6.0A 27	Id=5.0A 38	846	0.5@1A
V14912AA Q1		30	±20	8.5	40	30	3	2	3.0	Id=8.5A 13.8	Id=7.0A 19.7		971	0.5@1A
V14912AA Q2		30	±12	7.0	30			2	2.0	Id=7.0A 20	Id=6.0A 24.3		590	
V14914AA Q1		30	±20	8.5	30	30	3	2	3.0	Id=8.5A 15.5	Id=6.0A 23		971	0.5@1A
V14914AA Q2		30	±20	8.5	30			2	3.0	Id=8.5A 15.5	Id=6.0A 23		1040	
V14916AA Q1		30	±20	8.5	40	30	3	2	3.0	Id=8.5A 14	Id=6.0A 21		3740	0.5@1A
V14916AA Q2		30	±20	8.5	40			2	3.0	Id=8.5A 14	Id=6.0A 21		1040	
V14918AA Q1		30	±12	9.3	40	30	3	2	2.0	Id=9.3A 11.7	Id=8.8A 13.1		3740	0.5@1A
V14918AA Q2		30	±20	8.3	40			2	3.0	Id=8.3A 14.9	Id=7.0A 21.6		1040	

Vds : Drain-Sourse voltage (MOSFET)
Vgs :Gate-Sourse voltage (MOSFET)
Id :Cotinuous drain current (MOSFET)
Idm :Pulsed drain current (MOSFET)
Vka :Schottky reverse voltage (Schottky)
If : Cotinuous forward current (Schottky)
Pd :Power dissipation (left: MOSFET light: Schottky)
Vgs(th) :Gate threshold voltage
Rds(ON) :Static Drain-Source on resistance
Ciss :Input capacitance (dynamic parameter)
Vf : Forward voltage drop (Schottky)
Junction and storage temperature range (MOSFET and Schottky)
: -55 ℃ to 150 ℃

■ General description

Vxx6xxxA series uses advanced trench technology to provide excellent Rds(ON) and low gate charge. This series consists of N-ch & P-ch in one packinge.And some products haveintrenal ESD protection.

■ Application

● High speed power inverters

■ Package

● SOT-8, SOT-26, SC-70-6
TO-252-5, TO-252-4

■ Selection guide

Vxx6xxxA-x

Symbol		
a , b	Product code	Number
c	Feature	6: Complementary * A
d , e	Product number	Number
f	Package	A: SOP-8 B: SOT-26 C: SC-70-6 H: TO-252-5 K: TO-252-4
g	Product version	A
h	Taping direction	S: SOT-26, SC-70-6, TO-252-5, TO-252-4 N: SOP-8 Ref.P114 to P118

Vx x 6 x x x A - x
↑↑↑↑↑↑↑ ↑
a b c d e f g h

* A This number 6 of complementary and complementary whit schottky diode are same.
(Ref. P112)
* Taping direction is one way.

■ Pin configuration

SOP-8(TOP VIEW)

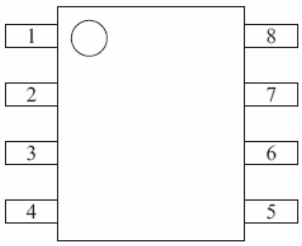

Pin No.	Pin name
1	SOURCE2
2	GATE2
3	SOURCE1
4	GATE1
5	DRAIN1
6	DRAIN1
7	DRAIN2
8	DRAIN2

Pin No.	Pin name
1	SOURCE1
2	GATE1
3	SOURCE2
4	GATE2
5	DRAIN2
6	DRAIN2
7	DRAIN1
8	DRAIN1

SOP-26(TOP VIEW)

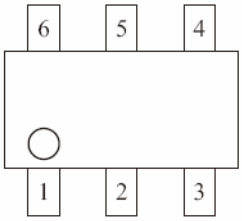

Pin No.	Pin name
1	GATE1
2	SOURCE2
3	GATE2
4	DRAIN2
5	SOURCE1
6	DRAIN1

SC-70-6(TOP VIEW)

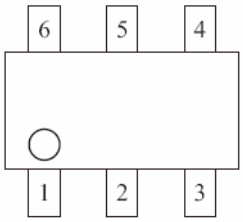

Pin No.	Pin name
1	SOURCE1
2	GATE1
3	DRAIN2
4	SOURCE2
5	GATE2
6	DRAIN1

TO-252-5(TOP VIEW)

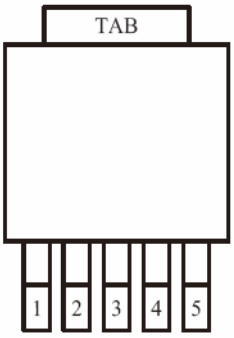

Pin No.	Pin name
1	SOURCE1
2	GATE1
3	DRAIN1/ DRAIN2
4	GATE2
5	SOURCE2

TO-252-4(TOP VIEW)

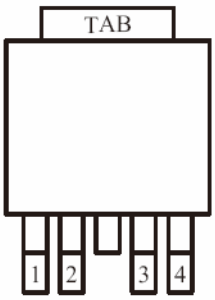

Pin No.	Pin name
1	SOURCE1
2	GATE1
3	SOURCE2
4	GATE2
5	DRAIN1/ DRAIN2

■ Circuit

V146xxAA
Vxx6xxHA

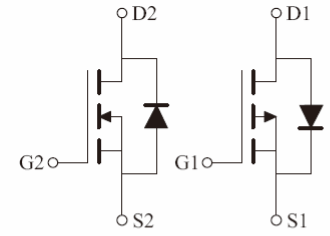

V346xxAA
Vxx6xxEA

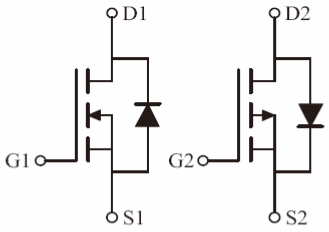

Vxx6xxGA

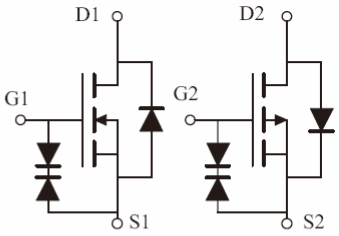

V14615AA

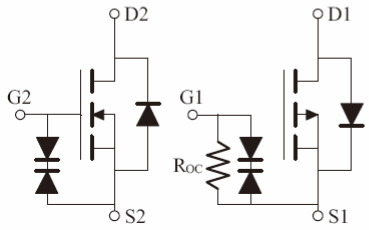

V356xxKA

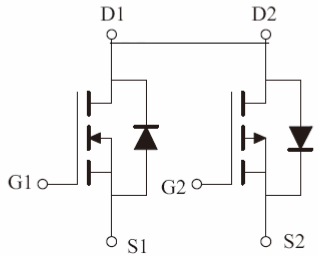

V14613AA

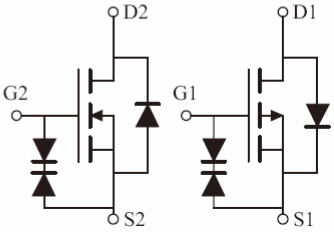

■ Complementary

Ta=25˚C

Product	N-ch/P-ch	Package	Maximum Absolute Ratings					Electrical Characteristics							
			Vds	Vgs	Id	Idm	Pd	Vgs(th) (Max.)	Rds(ON)(Typ.) N-ch:Vgs=10V P-ch:Vgs=-10V		N-ch:Vgs=4.5V P-ch:Vgs=-4.5V		N-ch:Vgs=2.5V P-ch:Vgs=-2.5V		Ciss (Tpy.)
			V	V	-A	A	W	V	MΩ						pF
V14603AA	N-ch	SOP-8	30	±12	4.7	30	2	1.4	Id=4.0A	45.0	Id=3.0A	55.0	Id=2.0A	83.0	390
	P-ch		-30	±20	-5.8	-40	2	-2.2	Id=-5.0A	29.0	Id=-5.0A	39.0			920
V14604AA	N-ch		30	±20	6.9	30	2	3.0	Id=6.9A	22.5	Id=5.0A	34.5			680
	P-ch		-30	±20	-5.0	-20	2	-3.0	Id=-5.0A	39.0	Id=-4.0A	67.0			700
V14606AA	N-ch		30	±20	6.9	30	2	3.0	Id=6.9A	22.5	Id=5.0A	34.5			680
	P-ch		-30	±20	-6.0	-30	2	-2.4	Id=-6.0A	28.0	Id=-5.0A	44.0			920
V14609AA	N-ch		30	±20	8.5	40	2	3.0	Id=8.5A	15.5	Id=6.0A	23.0			1040
	P-ch		-30	±12	-3.0	-6	2	-1.4	Id=-3.0A	102.0	Id=-2.0A	128.0	Id=-1.0A	187.0	409
V14611AA	N-ch		60	±20	6.3	40	2	3.0	Id=6.3A	20.0	Id=5.7A	22.0			1920
	P-ch		-60	±20	-4.9	-30	2	-3.0	Id=-4.9A	34.0	Id=-4.4A	42.0			2417
V14612AA	N-ch		60	±20	4.5	20	2	3.0	Id=4.5A	46.0	Id=3.0A	64.0			450
	P-ch		-60	±20	-3.2	-20	2	-3.0	Id=-3.2A	84.0	Id=-2.8A	106.0			930
V14613AA	N-ch		30	±20	7.2	30	2	3.0	Id=7.2A	20.0	Id=4.0A	30.0			522
	P-ch		-30	±20	-6.1	-30	2	-3.0	Id=-6.1A	28.0	Id=-4.0A	45.0			1040
V14614AA	N-ch		40	±20	6.0	20	2	3.0	Id=6.0A	23.2	Id=5.0A	32.6			404
	P-ch		-40	±20	-5.0	-20	2	-3.0	Id=-5.0A	34.7	Id=-2.0A	50.6			657
V14615AA	N-ch		30	±20	7.2	30	2	3.0	Id=7.2A	20.0	Id=4.0A	30.0			522
	P-ch		-30	±20	-5.7	-30	2	-3.0	Id=-5.7A	32.0	Id=-4.0A	48.0			1035
V14616AA	N-ch		30	±20	8.1	30	2	3.0	Id=8.1A	16.4	Id=6.0A	23.4			1040
	P-ch		-30	±20	-7.1	-30	2	-3.0	Id=-7.1A	20.0	Id=-5.6A	29.0			1573
V14620AA	N-ch		30	±20	7.2	30	2	3.0	Id=7.2A	20.0	Id=5.0A	29.0			660
	P-ch		-30	±20	-5.3	-30	2	-3.0	Id=-5.3A	31.0	Id=-4.5A	48.0			980
V34600AA	N-ch		30	±20	7.0	20	2	2.5	Id=7.0A	20.5	Id=6.0A	30.0			680
	P-ch		-30	±20	-5.0	-20	2	-2.5	Id=-5.0A	37.5	Id=-4.0A	62.0			780
V34601AA	N-ch		30	±20	7.0	28	2	2.5	Id=7.0A	14.0	Id=6.0A	21.0			1700
	P-ch		-30	±20	-6.0	-24	2	-2.5	Id=-6.0A	28.0	Id=-5.0A	44.0			970
V34603AA	N-ch		30	±20	7.0	20	2	2.5	Id=7.0A	20.5	Id=6.0A	30.0			680
	P-ch		-30	±20	-6.0	-20	2	-2.5	Id=-6.0A	27.5	Id=-5.0A	43.5			920
V34604AA	N-ch		40	±20	7.0	20	2	2.5	Id=7.0A	21.0	Id=6.0A	30.0			790
	P-ch		-40	±20	-6.0	-20	2	-2.5	Id=-6.0A	50.0	Id=-4.0A	80.0			690
V34605AA	N-ch		30	±20	7.0	20	2	2.5	Id=7.0A	18.0	Id=6.0A	25.0			790
	P-ch		-30	±20	-6.0	-20	2	-2.5	Id=-6.0A	28.0	Id=-5.0A	44.0			970
V34606AA	N-ch		30	±20	4.0	12	2	2.5	Id=4.0A	48.0	Id=3.0A	72.0			790
	P-ch		-30	±20	-5.0	-20	2	-2.5	Id=-5.0A	34.0	Id=-4.0A	58.0			690
V34608AA	N-ch		60	±20	4.5	20	2	2.5	Id=4.5A	42.0	Id=4.0A	55.0			650
	P-ch		-60	±20	-3.5	-20	2	-2.5	Id=-3.5A	70.0	Id=-3.0A	100.0			630
V34609AA	N-ch		30	±20	4.0	10	2	2.5	Id=4.0A	48.0	Id=3.0A	72.0			265
	P-ch		-30	±20	-3.0	10	2	-2.5	Id=-3.0A	100.0	Id=-2.0A	170.0			290

Vds ：Drain-Sourse voltage
Vgs ：Gate-Sourse voltage
Id ：Continuous drain current
Idm ：Pulsed drain current
Pd ：Power dissipation
Vgs (th) ：Gate threshold voltage
Rds(ON)：Static Drain-Source on resistance
Ciss ：Input capacitance
Junction and storage temperature range
:-55°C to 150°C

■ Complementary

Ta=25℃

Product	N-ch/ P-ch	Package	Maximum Absolute Ratings					Electrical Characteristics							
			Vds	Vgs	Id	Idm	Pd	Vgs(th) (Max.)	Rds(ON)(Typ.) N-ch:Vgs=10V		N-ch:Vgs=4.5V		N-ch:Vgs=2.5V/1.		Ciss (Typ.)
			V	V	A	A	W	V	mΩ						pF
V16601EA	N-ch	SOT-26	30	±12	3.4	30	1.15	1.4	Id=3.0A	50.0	Id=3.0A	60.0	Id=2.0A	88	390
	P-ch		-30	±12	-2.3	-30	1.15	-1.4	Id=2.3A	107.0	Id=-2.0A	135.0	Id=-1.0A	195	409
V16602EA	N-ch		30	±20	3.1	12	1.15	3.0	Id=3.1A	54.0	Id=2.0A	88.0			200
	P-ch		-30	±20	-2.7	-12	1.15	-3.0	Id=2.7A	77.0	Id=-2.0A	130.0			260
V16603EA	N-ch		20	±8	1.7	15	1.15	0.8			Id=1.7A	186.0	*Id=0.7A	*326	101
	P-ch		-30	±12	-2.3	-30	1.15	-1.4	Id=2.3A	107.0	Id=-2.0A	135.0	Id=-1.0A	195	409
V16604EA	N-ch		20	±8	3.4	15	1.15	1.0			Id=3.4A	46.0	*Id=2.0A	*72	436
	P-ch		-20	±8	-2.5	-15	1.15	-1.0			Id=-2.5A	86.0	*Id=-1.0A	*151	540
V16605EA	N-ch		20	±8	1.7	15	1.15	0.9			Id=1.9A	165.0	*Id=1.3A	*325	101
	P-ch		-20	±8	-2.5	-15	1.15	-1.0			Id=-2.5A	81.0	*Id=-1.0A	*146	540
V16606EA	N-ch		30	±20	3.5	10	1.15	2.5	Id=3.5A	55.0	Id=2.0A	75.0			200
	P-ch		-30	±20	-2.3	-10	1.15	-2.5	Id=-2.3A	115.0	Id=-1.5A	185.0			190
V17600GA	N-ch	SC-70-6	20	±8	0.9	5	0.30	0.9			Id=0.9A	181.0	*Id=0.7A	*317	101
	P-ch		-20	±8	-0.6	-3	0.30	-0.9			Id=-0.6A	415.0	*Id=-0.4A	*700	114
V24603HA	N-ch	TO-252-5	60	±20	12.0	30	20.0	3.0	Id=12.0A	47.0	Id=6.0A	67.0			450
	P-ch		-60	±20	-12.0	-30	37.5	-3.0	Id=-12.0A	91.0	Id=-6.0A	114.0			987
V24604HA	N-ch		40	±20	8.0	30	20.0	3.0	Id=8.0A	25.0	Id=6.0A	34.0			404
	P-ch		-40	±20	-8.0	-30	50.0	-3.0	Id=-8.0A	41.0	Id=-4.0A	57.0			657
V35600KA	N-ch	TO-252-4	60	±20	5.0	40	3.0	2.5	Id=5.0A	42.0	Id=4.0A	55.0			650
	P-ch		-60	±20	-4.0	-30	3.0	-2.5	Id=-4.0A	70.0	Id=-3.0A	100.0			630
V35601KA	N-ch		40	±20	7.0	50	3.0	3.0	Id=7.0A	24.0					530
	P-ch		-40	±20	-5.5	-50	3.0	-3.0	Id=-5.5A	37.0					690
V35602KA	N-ch		30	±20	8.0	50	3.0	2.5	Id=8.0A	18.0	Id=7.0A	25.0			790
	P-ch		-30	±20	-6.0	-50	3.0	-2.5	Id=-6.0A	34.0	Id=-5.0A	58.0			690
V35603KA	N-ch		40	±20	10.0	50	3.0	3.0	Id=10.0A	19.0					1145
	P-ch		-40	±20	-7.0	-50	3.0	-3.0	Id=-7..0A	28.0					1000
V35604KA	N-ch		30	±20	8.5	50	3.0	2.5	Id=8.0A	17.5	Id=6.0A	24.0			1200
	P-ch		-30	±20	-7.5	-50	3.0	-2.5	Id=-7.0A	28.0	Id=-5.0A	46.0			970

∗Rds(ON):Vgs=1.8V

Vds : Drain-Sourse voltage
Vgs : Gate-Sourse voltage
Id : Continuous drain current
Idm : Pulsed drain current
Pd : Power dissipation
Vgs(th) : Gate-Sourse voltage
Rds(ON) :Static Drain-Source on resistance
Ciss : Input capacitance

Junction and storage temperature ranre : : -55℃ to 150

■ General description

Vxx6xxxA series uses advanced trench technology to provide excellent Rds(ON) and low gate charge. This series consists of N-ch & P-ch in one packinge.

■ Application

● High speed power inverters

■ Package

● SOT-8

■ Selection guide

Vxx6xxxA-N

Symbol		
a , b	Product code	Number
c	Feature	6: Complementary With schottky iode * A
d , e	Product number	Number
f	Package	A: SOP-8
g	Product version	A
h	Taping direction	N: Ref. P116

Vx x 6 x x x A - N
↑↑↑↑↑↑↑↑ ↑
a b c d e f g h

■ Pin configuration

SOP-8(TOP VIEW)

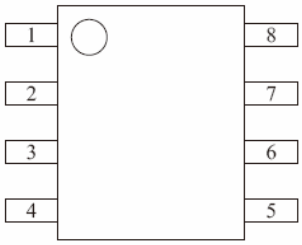

Pin No.	Pin name
1	SOURCE2/ANODE
2	GATE2
3	SOURCE1
4	GATE1
5	DRAIN1
6	DRAIN1
7	DRAIN2/ CATHODE
8	DRAIN2/ CATHODE

■ Circuit

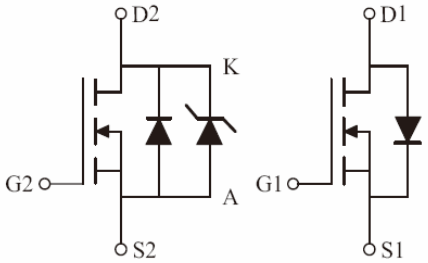

■ Complementary MOS FET with schottky diode

Ta=25℃

Product	Package	Maximum Absolute Ratings							Electrical Characteristics					
		Vds	Vgs	Id	Idm	Vka	If	Pd	Vgs(th) (Max.)	Rds(ON)(Typ.) N-ch:Vgs=10V	Rds(ON)(Typ.) N-ch:Vgs=4.5V	Rds(ON)(Typ.) N-ch:Vgs=2.5V	Ciss (Typ.)	Vf (Max.)
		V	V	A	A	V	A	W	V	mΩ			pF	
V14607AA (N-ch)	SOP-8	30	±20	6.9	30	30	3	2	30	Id=6.9A 22.5	Id=5.0A 34.5		680	0.5@1A
V14608AA (P-ch)		-30	±20	-6.0	-30			2	-2.4	Id=-6.0A 28.0	Id=-5.0A 44.0		920	
V14610AA (N-ch)		30	±20	8.5	30	30	3	2	30	Id=8.5A 15.5	Id=6.6A 23.0		1040	0.5@1A
V14610AA (P-ch)		-30	±20	-7.1	-30			2	-2.7	Id=-7.1A 20.0	Id=-5.6A 29.0		1573	

Vds : Drain-Sourse voltage(MOSFET)
Vgs : Gate-Sourse voltage(MOSFET)
Id : Continuous drain current(MOSFET)
Idm : Pulsed drain current(MOSFET)
Vka :Schottky reverse voltages(Schottky)
If : Continuous forward current(Schottky)
Pd : Power dissipation(left:MOSFET light:Schottky)
Vgs(th) :Gate-Sourse voltage
Rds(ON) :Static Drain-Source on resistance
Ciss : Input capacitance(dynamic parameter)
Vf :Forward voltage drop(Schottky)
Junction and storage temperature ranre(MOSFET and Schottky)
: -55℃ to 150℃

Chapter 9 PACKAGE, REEL, TAPING

Package(Units: mm)	Taping(Units: mm)	Reel(Units: mm)
SOT-23		
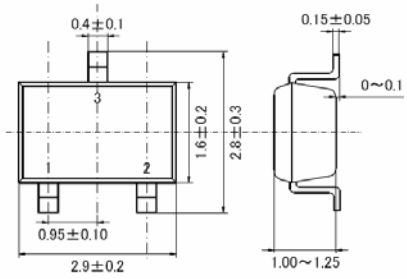	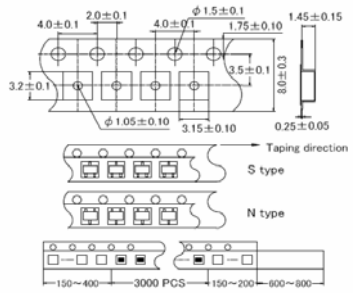	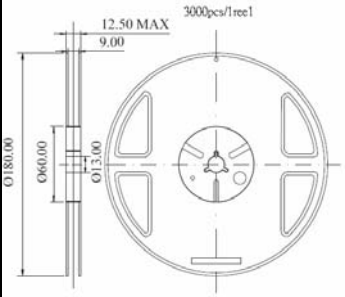
SOT-25		
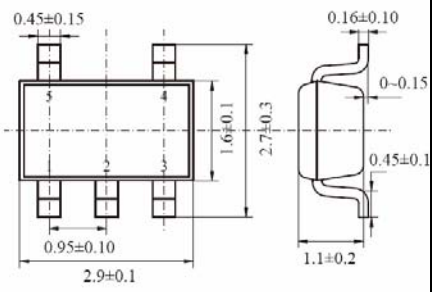	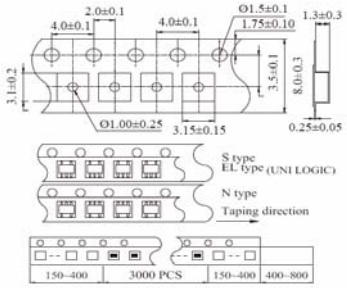	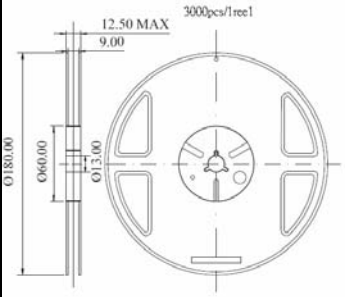
SOT-26		
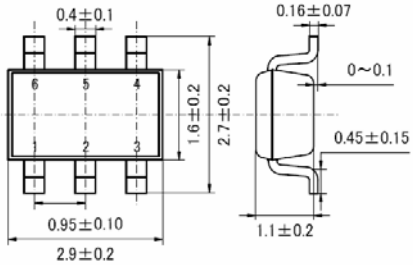	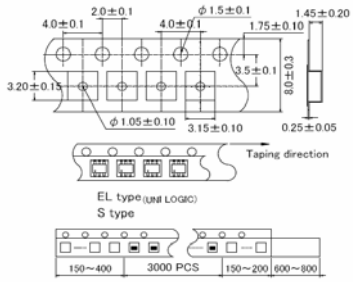	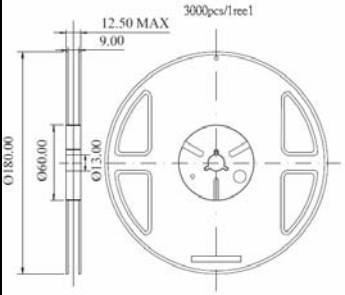
SSOT-25(SC-88A)		
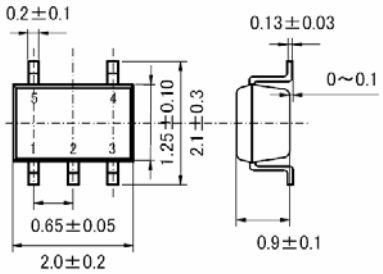	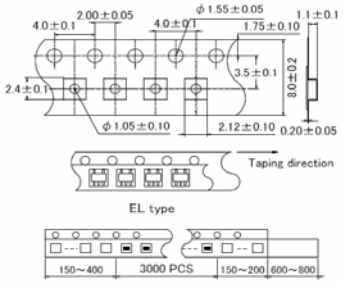	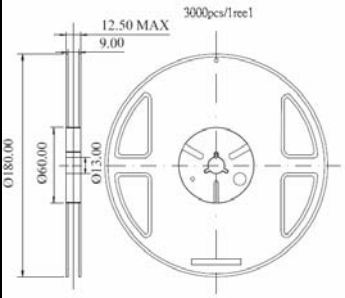

Package(Units: mm)	Taping(Units: mm)	Reel(Units: mm)
SC-82AB		
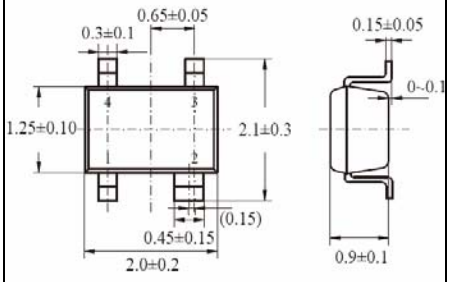	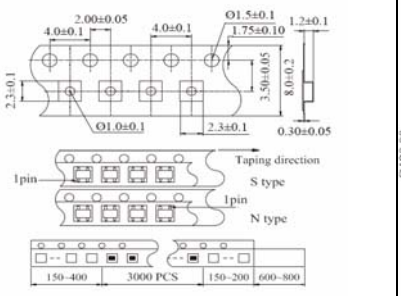	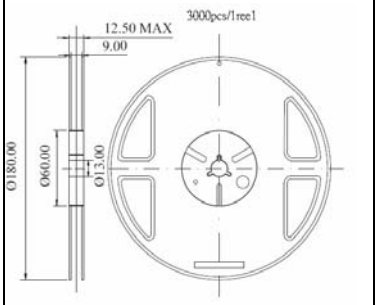
SOT-89		
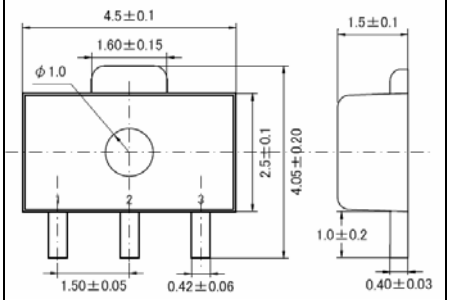	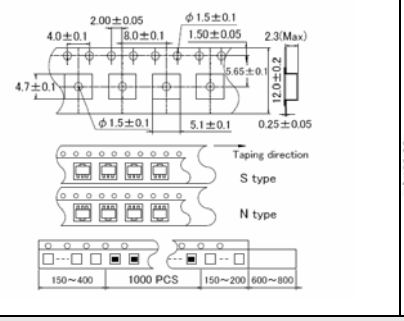	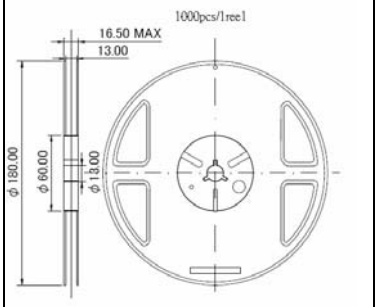
SOT-89-5		
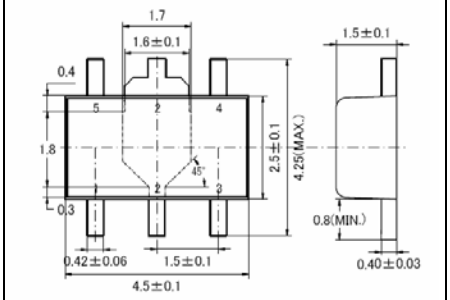	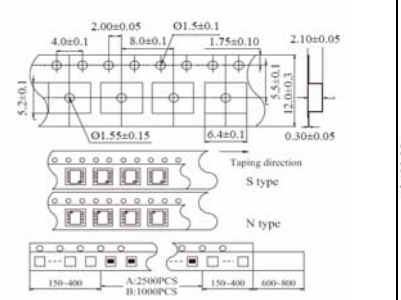	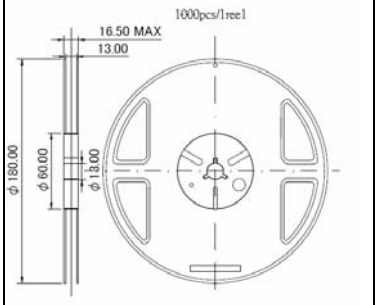
SOP-8		
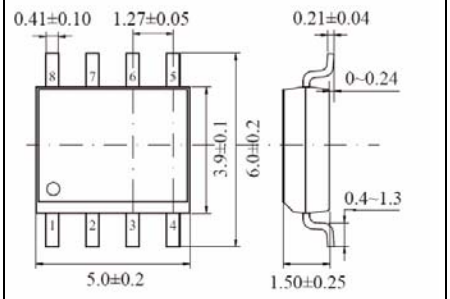	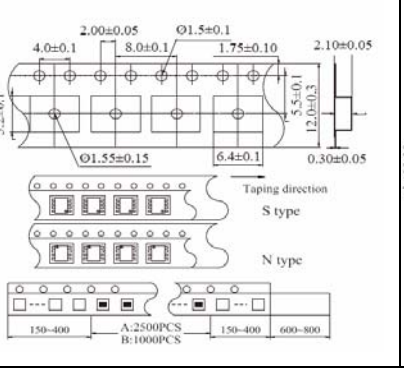	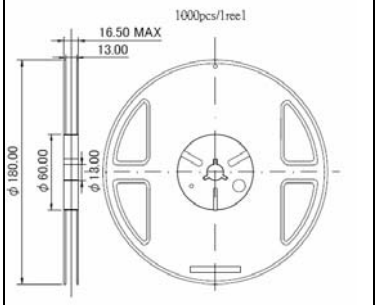

Package(Units: mm)	Taping(Units: mm)	Reel(Units: mm)
SOT-8(MOSFET)		
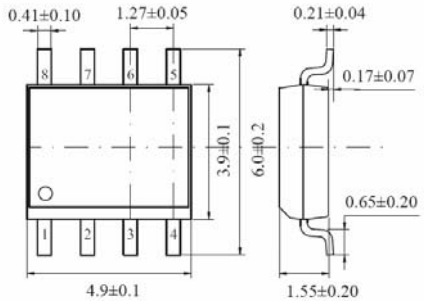	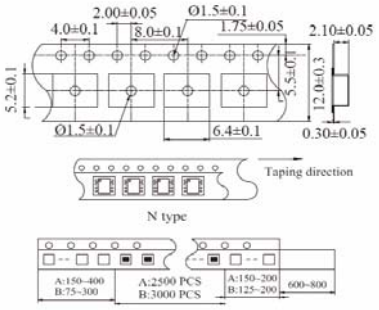	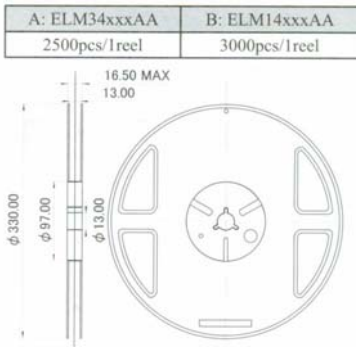
TSSOP-8		
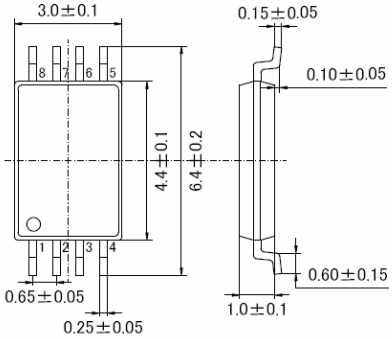	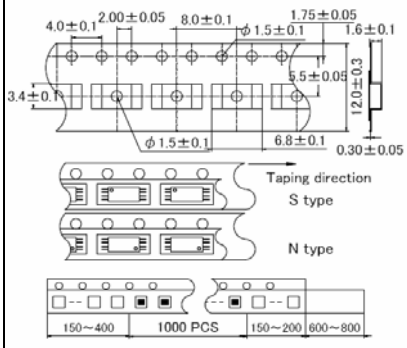	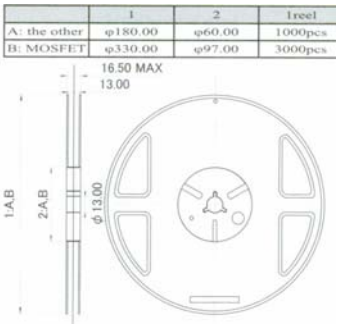
SON-6		
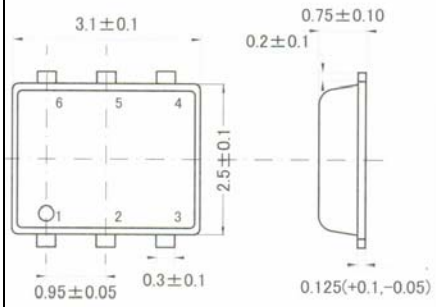	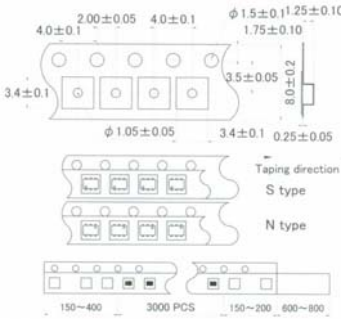	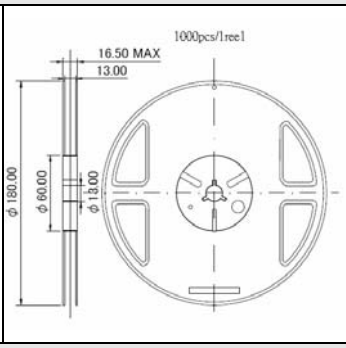
SC-70(SOT-323)		
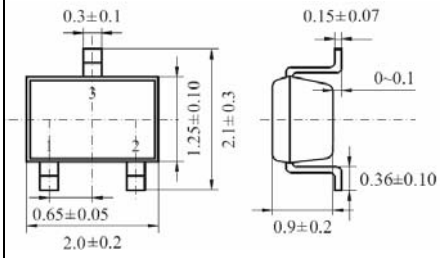	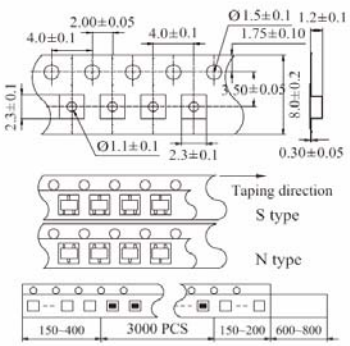	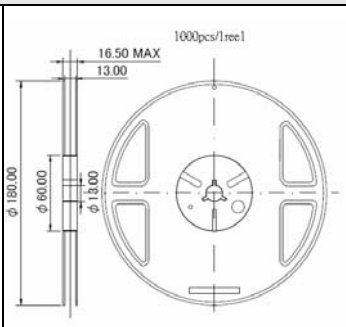

Package(Units: mm)	Taping(Units: mm)	Reel(Units: mm)
SC-70-6		
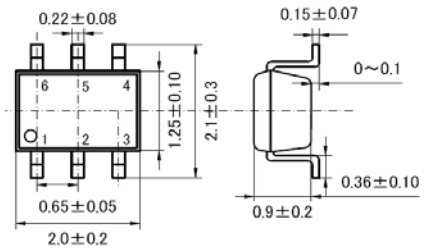	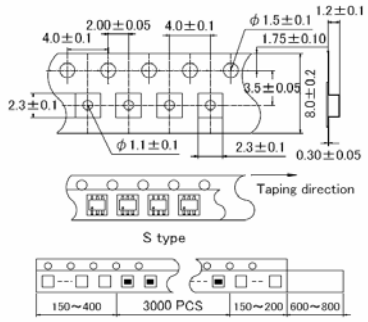	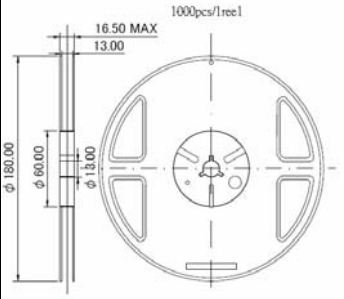
SC-70-5		
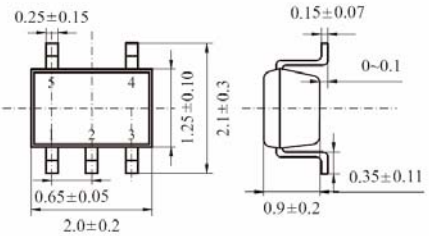	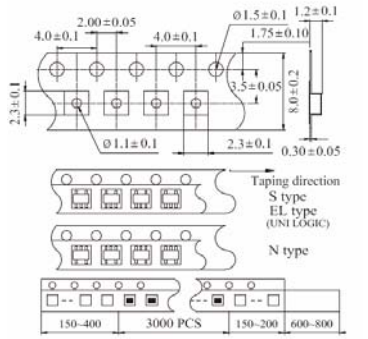	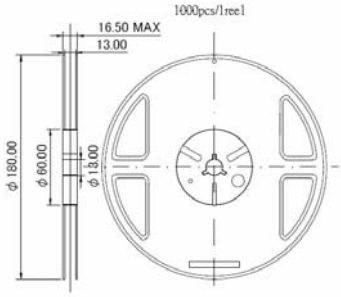
SOT-223		
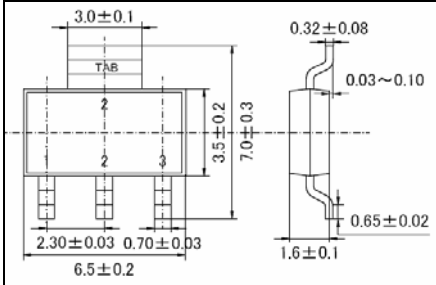	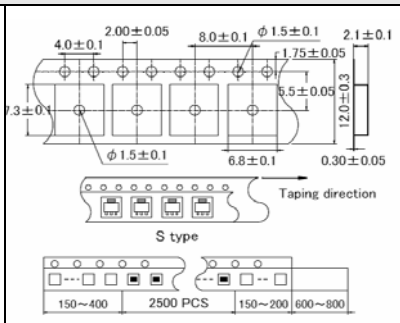	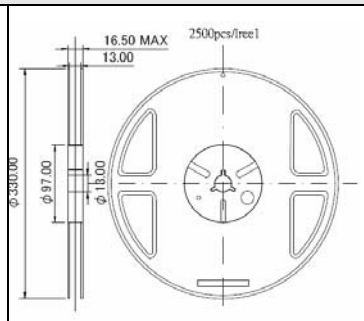
TO-252		
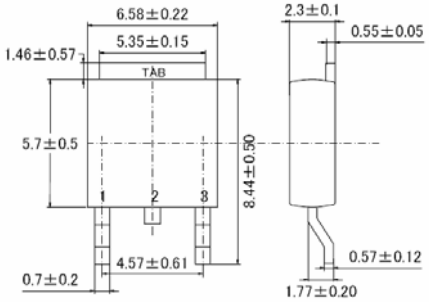	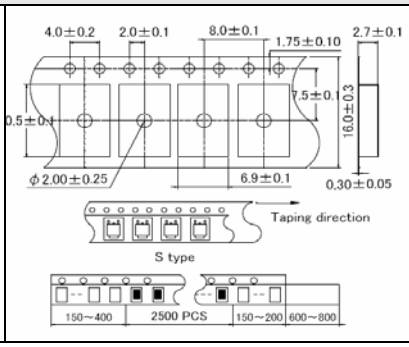	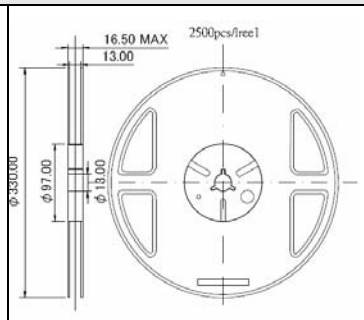

Package(Units: mm)	Taping(Units: mm)	Reel(Units: mm)
TO-252-3		
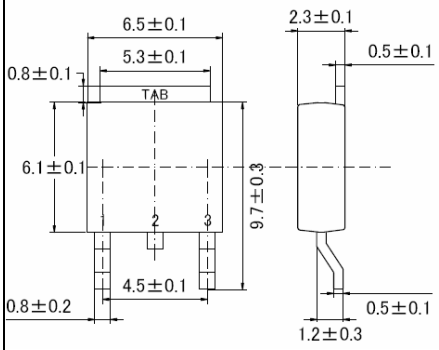	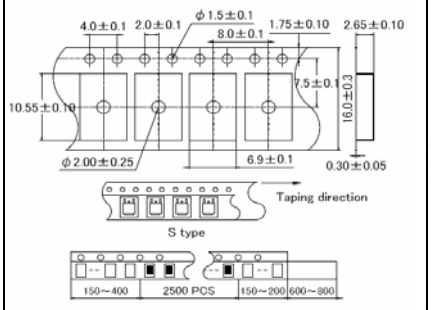	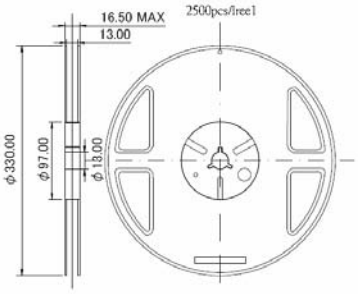
TO-252-4		
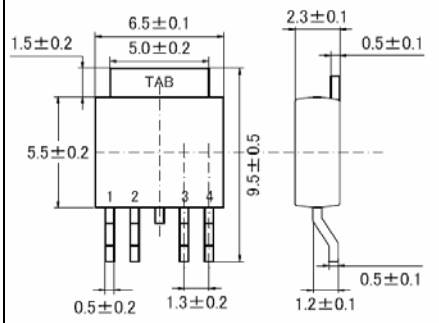	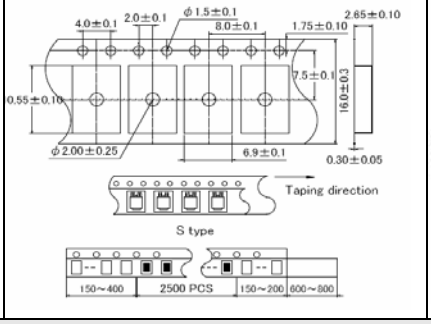	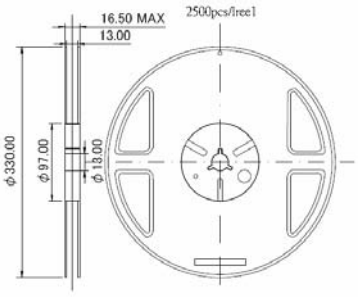
TO-252-5		
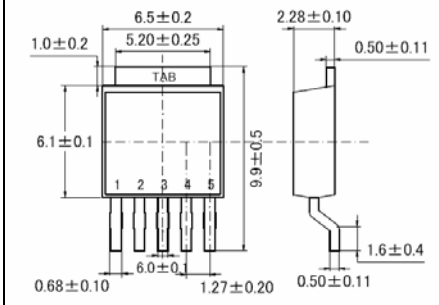	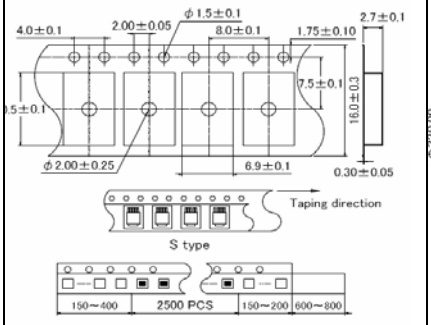	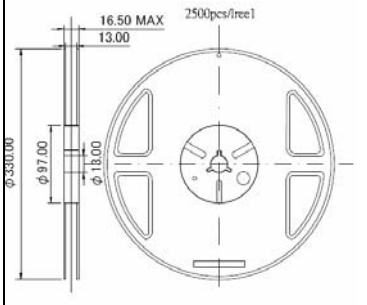
4×4 QFN-16